FAAC

E124 Quick Start Guide

Please ensure that the correct cabling has been installed prior to commissioning of the system, as incorrect cabling can prevent the unit from operating correctly immediately or after installation.

BUS-2EASY ENCODER and PHOTOCELLS Cable Specification: 2 core 0.5mm2 Multi-Strand Shielded Cable with the Sheath connected to the Earth at one end. Please do not share BUS-2EASY devices with other DC Voltage devices as it leads to electrical noise causing interference with the digital data on BUS-2EASY.

Motor Cable Specification: Minimum 2 core 2.5mm2 Multi-Strand Cable for a recommended distance of 10mtrs, further distances are possible but will require thicker cable.

CE DECLARATION OF CONFORMITY

Manufacturer: FAAC S.p.A.
Address: Via Calari, 10 - 40069 Zola Predosa BOLOGNA - ITALY
Declares that: The E124 control unit

conforms to the essential safety requirements of the following EEC directives

2006/95/EC Low Voltage Directive
2004/108/EC Electromagnetic Compatibility Directive

Additional note:
This product underwent tests in a typical uniform configuration
(all products manufactured by FAAC S.p.A.).

Bologna, 01 March 2014

CEO
A.Marcellan

These instructions are to be considered as a rapid guide for installation and to confirm the correct handing and polarity of the motors. They can also be used to confirm the operating logics before additional safety devices are fitted to the system as specified by the Risk Assessment undertaken by the installer. The installer should still familiarise themselves with the full manual and the safety information contained within. (available at https://www.faac.co.uk/accessories-and-control-boards/control-boards/for-swing-gates/e124-control-board)

Installation Sequence

1. Perform a Risk Assessment for the system and resolve by design as many risks as possible
2. Secure the housing
3. Mount the motors as detailed in their relevant instructions
4. Use suitable cabling for the motors (motors should be 2.5mm2 per core minimum) and accessories (BUS devices must be wired using a minimum 2 core, 0.5mm multi-stranded screened cable (the screen MUST be attached to the Earth Terminal)
5. Wire the electronic control board as per Page 3 for the motors and wire the mains into the switching power supply located under the main board, following the L/N/E polarity on the plug
6. Power up the E124 Board (please note that the board will take 5-10 seconds to boot-up)
7. Verify the status of the LED's and Display are as per Page 3
8. Depending on the installation, verify that the LED's on the encoders correspond to those described on Page 4
9. Wire in an OP-A trigger as per Page 3, alternatively program a remote control as shown on Page 11.
10. Familiarise yourself with how to program the E124 control board as per Page 5
11. Begin Basic Programming of the E124 on Page 5
    a. Check Rotation of the motors by using Function "n1" and "n2" for motor 1 and 2 respectively as shown on Page 7
    b. If using encoders, "EN" must be set to "y" and "bu" function should be followed as shown on Page 7
    c. Verify that the Gates are in the closed position as detailed on Page 8
    d. Run Time Learning – "tL" function and follow procedure as detailed on Page 8
12. Provide an opening command to verify that the system works correctly
13. Adjust Operating Logic according to the customer requirement
14. Connect Safety Devices to the system as deemed required by the Risk Assessment carried out previously
    a. Wireless Safety Edges can be connected via the BUS 2easy connection if using the FAAC XTR and XTS Wireless Receiver system, the "bu" function must also be re-addressed as shown on Page 7
    b. If not using the FAAC XTR and XTS System, we would recommend that the EasyBoard software be used and that IN4 and IN5 should be set to Safety Edge Input as desired, this will ensure that the board responds as fast as possible
    c. Traditional Photocells can be wired and configured as per Page 3
    d. FAAC BUS 2easy Photocells can be wired and configured as per Page 4, the "bu" function must also be re-addressed as shown on Page 7
    e. XGuard Laser Curtains would be configured as Traditional Photocells in 14.c
15. Connect any additional activation commands as per Page 3
16. If using either Safety Edges or Inherent Obstacle Detection as part of the Risk Assessment, there are useful Functions that can be modified to assist in attaining compliance on Page 9
17. If using XGuard Laser Curtains please test these in accordance with BS EN 12445/12453
18. Hand over all relevant documentation to the end customer as required by the Technical File and the Supply of Machinery (Safety) Regulations 2008

Key Components of E124 Board

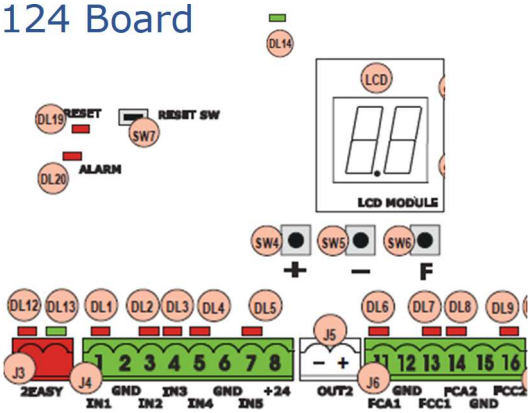

Description of Key Components

LCD	SIGNALS AND PROGRAMMING DISPLAY	DL8	"FCA2" STATUS LED -LIMIT SWITCH OPEN – IF GATE CLOSED ON
SW4	"+" PROGRAMMING BUTTON	DL9	"FCC2" STATUS LED -LIMIT SWITCH CLOSED – IF GATE CLOSED OFF
SW5	"-" PROGRAMMING BUTTON	DL12	LED FOR BUS-2EASY DEVICE ACTIVE
SW6	"F" PROGRAMMING BUTTON	DL13	LED FOR BUS-2EASY DIAGNOSTICS
SW7	"RESET SW" SOFTWARE RESET BUTTON	DL14	LED SIGNALING PRIMARY POWER ON
DL1	"IN1" STATUS LED – DEFAULT OPEN A - NORMAL STATE OFF	DL19	LED FOR WHEN "SW7" IS PRESSED
DL2	"IN2" STATUS LED – DEFAULT OPEN B - NORMAL STATE OFF	DL20	LED SIGNALLING "ALARM"
DL3	"IN3" STATUS LED – DEFAULT STOP - NORMAL STATE ON	J3	CONNECTOR FOR CONNECTION OF BUS-2EASY DEVICES
DL4	"IN4" STATUS LED – DEFAULT FSW OP - NORMAL STATE ON	J4	CONNECTOR FOR TERMINAL BOARD INPUTS
DL5	"IN5" STATUS LED – DEFAULT FSW CL - NORMAL STATE ON	J5	CONNECTOR FOR OUTPUT 2 (OUT2)
DL6	"FCA1" STATUS LED -LIMIT SWITCH OPEN – IF GATE CLOSED ON	J6	CONNECTOR FOR TRAVEL LIMITS
DL7	"FCC2" STATUS LED -LIMIT SWITCH CLOSED – IF GATE CLOSED OFF		

Electrical Connections

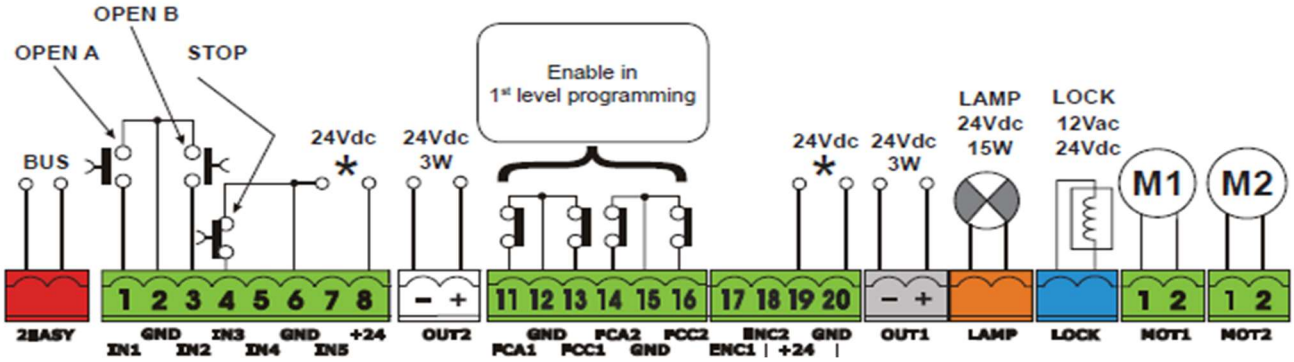

Connection of Traditional Photocells

The E124 Control Board allows for the use of traditional photocells (n/c with relay). Below is a layout drawing showing the basic positions normally covered. The wiring diagram is for Fail-Safe enabled photocells. In order to comply with the standards, all devices used for safety should either have a circuit monitored by the control board or be self-monitoring. FAAC Control boards are able to perform the monitoring by the use of a Fail-Safe function, whereby the test negative is momentarily dropped (please note that this may not be compatible with non-FAAC equipment). This function is enabled by entering Advanced Programming (detailed below) and setting function **o1 to 01**.

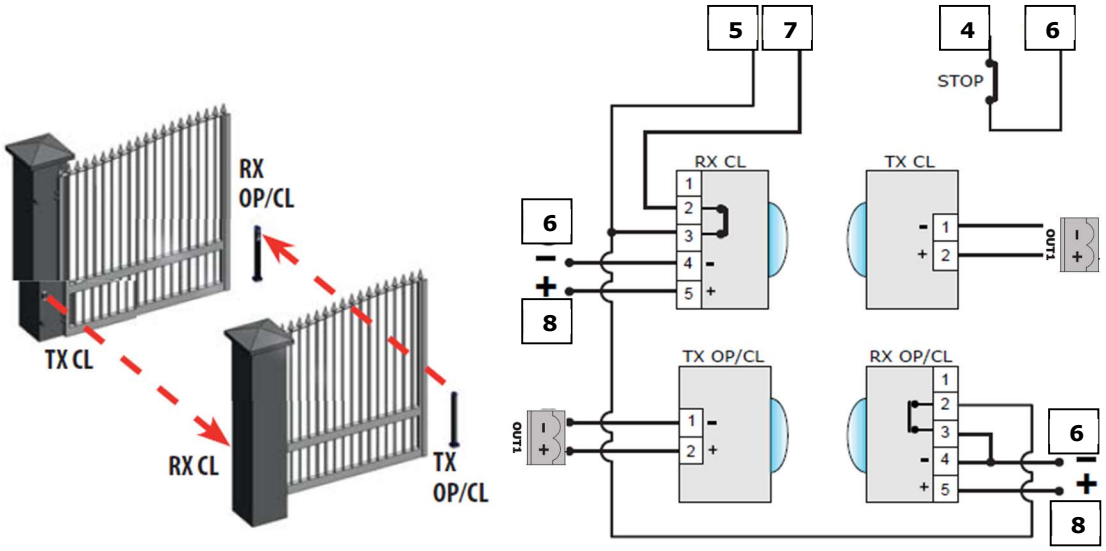

Connection of FAAC BUS 2Easy Photocells

The E124 Control Board also allows for the use of FAAC BUS 2easy photocells which allow for simpler cabling, a reduced power consumption, and Failsafe checking of each device independently. The Failsafe checking being performed by our proprietary FAAC BUS 2easy communication protocol also assist the installer by removing the need for separate cabling for a monitoring circuit. (Please note that FAAC BUS photocells are only compatible with FAAC Control Boards and those using the BUS Terminal or using the BUS Relay Interface Board).

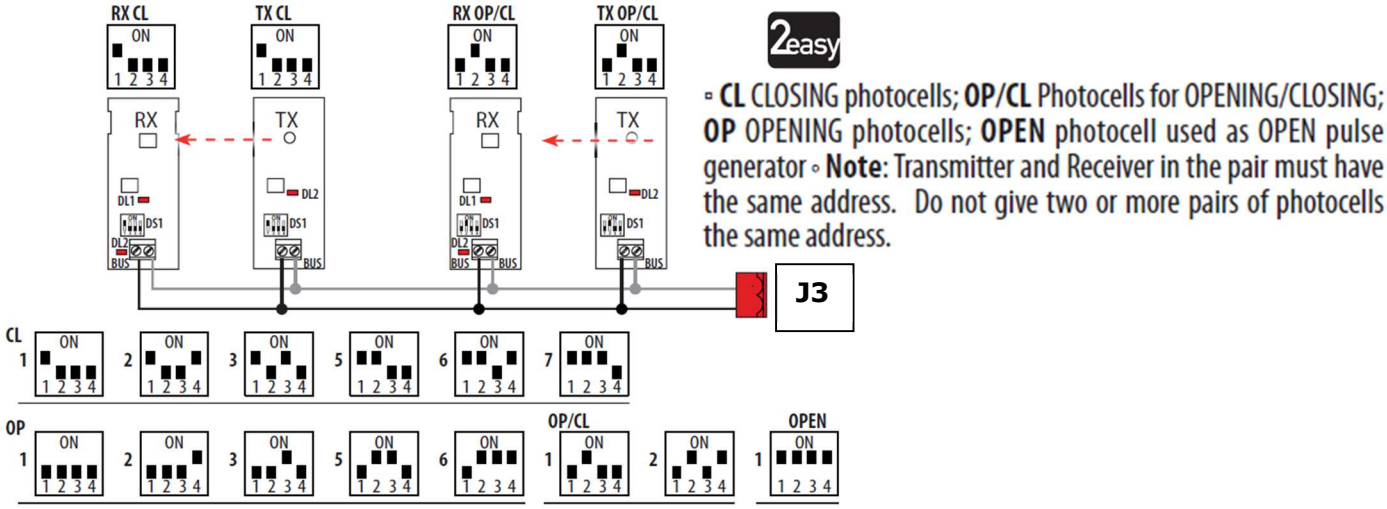

Connection of FAAC BUS 2easy Safecoders and S800 Encoders

The E124 Control Board also allows for the use of FAAC BUS 2easy Safecoders and the S800/S450 Encoders (required for operation these operators). This allows for the control board to have positional accuracy and allows for the possibility of inherent obstacle detection (Force Testing with the use a calibrated instrument to BS EN 12445/12453 norms (such as the Microtronics Blueforce Tester, available from FAAC UK) will be required to confirm suitability but please note that additional devices maybe required such as Safety Edges).

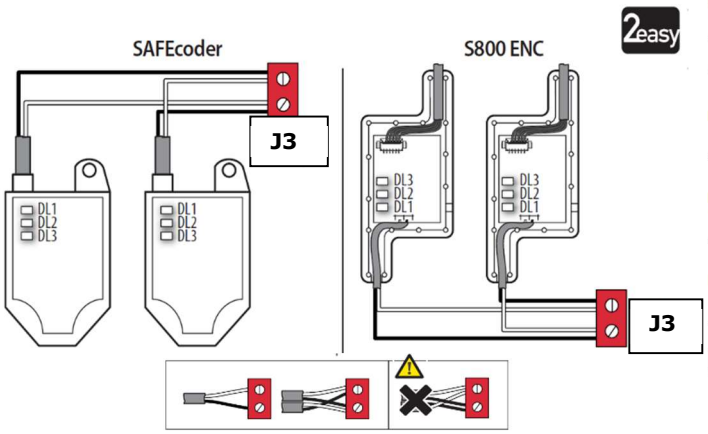

Tab. **BUS 2easy** Encoder LEDs Status

LED	ON	FLASHING	OFF
DL1	Power present Communication present	Power present Communication absent	Power absent Communication absent
	DL1 must always be on to confirm correct encoder/board connection.		
DL2	Leaf 1	/	Leaf 2
	DL2 indicates the leaf on which the encoder is installed; it must be on for leaf 1 and off for leaf 2.		
DL3	Stationary leaf	Leaf in motion	Stationary leaf
	DL3 indicates pulse reading during leaf movement using steady flashing. In stationary status of the leaf, the DL3 can be either on or off.		

In case of incorrect connection (DL2 on or off for both of the encoders), during the BUS 2easy accessories learning procedure, the DL1 leds of both encoders are FLASHING.

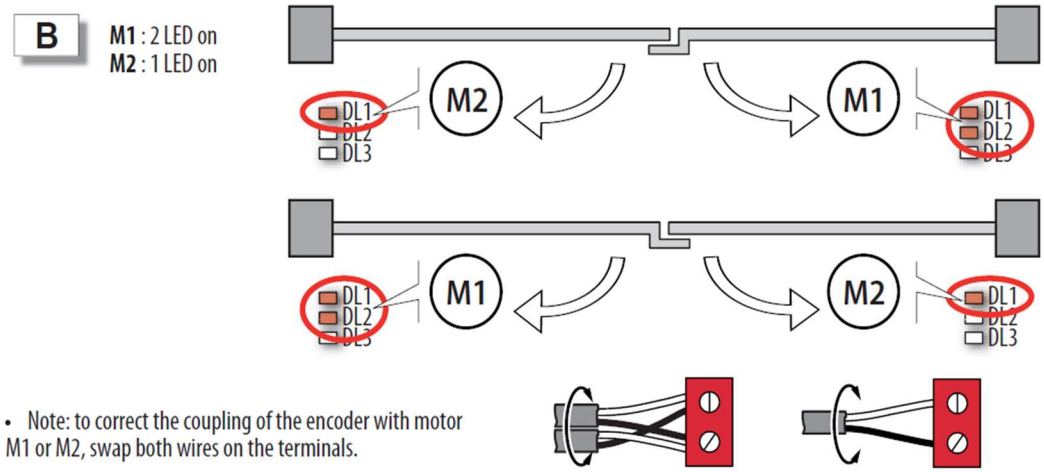

• Note: to correct the coupling of the encoder with motor M1 or M2, swap both wires on the terminals.

Verification of BUS 2easy Connections on J10 Terminal

The J3 Terminal on the E124 Control Board has two diagnostic LED's (DL15 – Red and DL14 – Green). These LED's assist in ensuring that any devices connected on the FAAC BUS 2easy network are installed correctly.

LED DL15 (Red)	
ON	Safety device engaged or pulse generator active
OFF	NO safety device engaged neither pulse generator active
LED DL14 (Green)	
ON steady	Normal activity (led ON even if there are no devices).
Slow blinking (blink every 2,5 sec)	BUS-2EASY line short-circuit.
Rapid blinking (blink every 0.5 sec)	Error in the BUS-2EASY connection. Repeat the device entry. If the error occurs again, check: - That there are no more than one device in the system with the same address. - Calling error (number > or < the connected BUS devices). - FAIL SAFE error on the BUS device.
OFF	Board in Sleep mode (if used).

E124 Control Board Programming

Programming is split over two levels:

- Basic Programming
- Advanced Programming

The function is displayed only while the button is pressed

Tab. BASIC programming phases.

❶	❷			❸	
PRESS AND HOLD **F**: THE FIRST FUNCTION APPEARS	RELEASE **F**: THE FUNCTION VALUE IS DISPLAYED	USING **+** OR **−**, SCROLL THE AVAILABLE VALUES UNTIL THE DESIRED ONE	PRESS **F**: TO MOVE TO THE NEXT FUNCTION	FUNCTION St (LAST FUNCTION) SELECT y TO SAVE THE PROGRAMMING OTHERWISE SELECT no TO EXIT THE PROGRAMMING WITHOUT SAVING	PRESS THE BUTTON **F** TO CONFIRM; AT THE END THE DISPLAY RETURNS TO VISUALIZE THE **AUTOMATED SYSTEM STATUS**
F	F	+/R1 -/R2	F		F

Tab. ADVANCED programming phases

❶	❷			❸	
PRESS AND HOLD **F** AND THEN ALSO **+** : THE FIRST FUNCTION APPEARS	RELEASE THE BUTTONS: THE FUNCTION VALUE IS DISPLAYED	USING **+** OR **−**, SCROLL THE AVAILABLE VALUES UNTIL THE THE DESIRED ONE	PRESS **F**: TO MOVE TO THE NEXT FUNCTION	FUNCTION St (LAST FUNCTION) SELECT y TO SAVE THE PROGRAMMING OTHERWISE SELECT no TO EXIT THE PROGRAMMING WITHOUT SAVING	PRESS THE BUTTON **F** TO CONFIRM; AT THE END THE DISPLAY RETURNS TO VISUALIZE THE **AUTOMATED SYSTEM STATUS**
+ +/R1 F	+/R1 F +	+/R1 -/R2	F		F

Basic Programming and Time Learning (Setup)

For simple programming of the motor type and logic only Basic Programming is required as below. The first parameter that MUST be set is the "CF". This will then allow correct configuration to proceed. Please note that until SETUP as been completed the display will show a flashing "50", which is SETUP requested.

Display	Basic Function		cF						
			0	1	2	4	3	6	5
cF	0	Configures the parameters with DEFAULT values corresponding to an installation with non-FAAC operators. (see column cF 0).	0	1	2	4	3	6	5
	1	Configures the parameters with DEFAULT values corresponding to an installation with operators **FAAC 412, 413/415, 770, 390, 770N** (see column cF 1).							
	2	Configures the parameters with DEFAULT values corresponding to an installation with operators **FAAC 391** (see column cF 2).							
	3	Configures the parameters with DEFAULT values corresponding to an installation with operators **FAAC S700H/S800H** (see column cF 3).							
	4	Configures the parameters with DEFAULT values corresponding to an installation with operators **FAAC 418.** (see column cF 4).							
	5	Configures the parameters with DEFAULT values corresponding to an installation with operators **FAAC S450H** (see column cF 5).							
	6	Configures the parameters with DEFAULT values corresponding to an installation with operators **FAAC S800H ENC** (see column cF 6).							
	PC	Mixed configuration from a PC/MAC							

Display	Basic Function	cF						
		0	1	2	4	3	6	5
dF	**DEFAULT:** y indicates that all the set values correspond to the default values. no indicates that one or more set values are different from the default.	y		y		y		y
LO	**FUNCTION LOGICS:** E Semi-automatic EP Semi-automatic Step-by-Step S Automatic Safety Devices SA Automatic with reversal during pause SP Automatic Step-by-Step Safety Devices AI Automatic 1 A Automatic AP Automatic Step-by-Step At Automatic timer b Semi-automatic "b" bC Mixed (Pulses for opening / Dead-man commands for closing) C Dead-man CU Logic modified from a PC/MAC	E		E		E		E
PA	**PAUSE TIME A (visualised only if the selected logic allows automatic reclosing):** Pause time following a **TOTAL** opening command. It has only effect if a logic with pause time was selected. Can be adjusted from 0 to 59 sec. in one-second steps. Next, the viewing changes in minutes and ten seconds (separated by a dot) and time is adjusted in 10-second steps, up to the maximum value of 9.5 minutes.	30		30		30		30
Pb	**PAUSE TIME B (visualised only if the selected logic allows automatic reclosing):** Pause time following a **PARTIAL** opening command. It has only effect if a logic with pause time was selected.	30		30		30		30
Mn	**NR. OF MOTORS:** You can select the number of motors present in the system: 1 = 1 motor 2 = 2 motors	02		02		02		02
F1	**MOTOR 1 POWER:** You can adjust the maximum power of motor 1, which is the same during both opening and closing. 01 = minimum power 50 = maximum power	25		25		40		35
F2	**MOTOR 2 POWER (visualised only with the function Mn = 2):** You can adjust the maximum power of motor 2, which is the same during both opening and closing.	25		25		40		35
SP	**SPEED:** Adjusts the motion speed of the motors. There are 10 levels. The value is relative and not absolute, because the speed value refers to the weight of the leaf measured during the SETUP cycle 01 = minimum speed 10 = maximum speed	08		08		08		08

Please note that for the majority of systems the default power and speed settings will be sufficient to allow the first setup. These values will generally require further adjustments if force limitation is being used as part of the safety systems and a new setup should be run after the power settings are changed.

Display	Basic Function	cF						
		0	1	2	4	3	6	5
En	**ENCODER USE:** You can enable/disable the use of encoders (both BUS and GATECODER encoders): y = encoders on both motors no = encoders disabled ☞ *When using configurations 3, 5 or 6 it is mandatory to use the encoder, no is not selectable*	no	no			y		y
FA	**LIMIT SWITCH WHEN OPENING:** Lets you set or disable use of the opening limit switch on swing-leaves. no = opening limit switches disabled 01 = the limit switch determines the stopping of motion 02 = the limit switch determines the start of deceleration	no	no			no		no
FC	**LIMIT SWITCH WHEN CLOSING:** Lets you set or disable use of the closing limit switch on swing-leaves. no = closing limit switches disabled 01 = the limit switch determines the stopping of motion 02 = the limit switch determines the start of deceleration	no	no			no		no
Cd	**DELAY FOR CLOSING LEAF (visualised only with the function Mn = 2):**	05	05			05		05
bu	**BUS-2EASY DEVICES ENTRY:** *See the related paragraph.*	no	no			no		no

Perform the entry: simultaneously press and hold + and − for at least 5 sec (during this time, the display will blink).
y will appear as a confirmation of entry completion.
Release the + and − buttons. The status of the BUS-2EASY devices will be displayed.

☞ *If no BUS device has ever been entered in the board, the display will read no.*

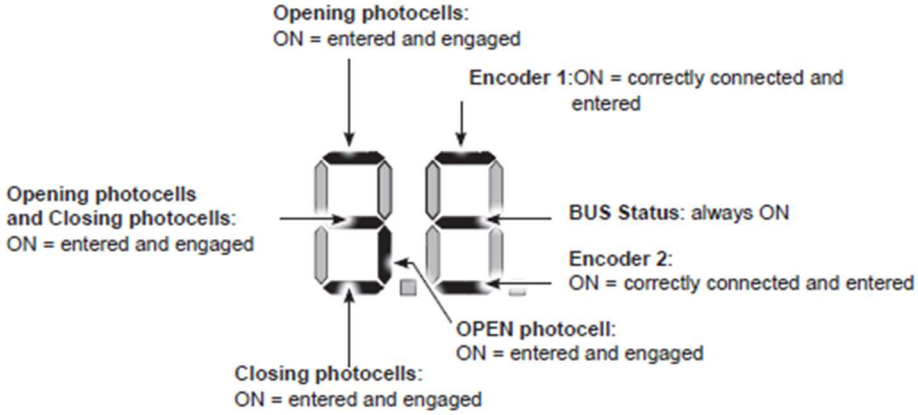

The below in the figure is what should be seen as an example for a double gate that is using encoders.

In STAND BY (gate closed and in stand-by) with BUS-2EASY *Encoder* on leaf 1 and leaf 2 and BUS-2EASY *Photocells* correctly connected and entered.

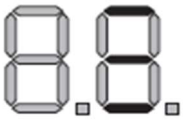

M2	**MOTOR 2 dead-man DRIVE mode (visualised only with the function Mn = 2)** + OPENS (visualising oP) until the button is held down − CLOSES (visualising cL) until the button is held down	--	--	--	--
M1	**MOTOR 1 dead-man DRIVE mode** + OPENS (visualising oP) until the button is held down − CLOSES (visualising cL) until the button is held down	--	--	--	--

Display	Basic Function	cF						
		0	1	2	4	3	6	5
tL	**WORK TIME LEARNING (SETUP):** *See the related paragraph.*	--	--			--		--

Perform the SET-UP as follows:

1. Enter BASIC programming and go to the parameter tL, when F is released -- will appear.
2. Ensure that the gate leaves are closed. Otherwise, proceed as follows:
   - Press and hold -/R2 to close leaf 2
   - Press and hold +/R1 to close leaf 1

☞ *Should pressing +/R1 and/or -/R2 command opening of the corresponding leaf, cut off power and, on terminal board J11 or J12, invert the cables of the corresponding motor.*

3. With the gate leaves closed, launch SETUP by pressing and holding ✚ and ━ until S1 begins to flash on the display (about 3 sec).
4. Release ✚ e ━. Leaf 1 begins its opening movement.

Operation WITHOUT Safecoder	Operation WITH Safecoder or S800H ENC
Leaf 1 automatically acknowledges the mechanical stop.	Leaf 1 automatically acknowledges the mechanical stop. It will in any case be possible to stop leaf movement at any time and in the desired point by sending an OPEN A pulse.

5. On the display S2 will flash (only if 2 motors have been selected): leaf 2 begins opening.

Operation WITHOUT Safecoder	Operation WITH Safecoder or S800H ENC
Leaf 2 automatically acknowledges the mechanical stop.	Leaf 2 automatically acknowledges the mechanical stop. It will in any case be possible to stop leaf movement at any time and in the desired point by sending an OPEN A pulse.

Steps 4 and 5 with function FA:

FA = 01 (the limit switch determines the stopping of motion) the OPEN A pulse for stopping motion is ignored.

*FA = 02 (the limit switch determines the start of deceleration) with **Safecoder** installed or operator **S800H ENC** send an OPEN A pulse only after involving the opening limit switch, without **Safecoder** or with operators different than **S800H ENC**, make sure that the limit switch is engaged before the mechanical stop.*

6. On the display S3 will flash (only if 2 motors have been selected): leaf 2 begins closing.

Operation WITHOUT Safecoder	Operation WITH Safecoder or S800H ENC
Leaf 2 automatically acknowledges the mechanical stop.	Leaf 2 automatically acknowledges the mechanical stop. It will in any case be possible to stop leaf movement at any time and in the desired point by sending an OPEN A pulse.

7. On the display S4 flashes: leaf 1 begins closing.

Operation WITHOUT Safecoder	Operation WITH Safecoder or S800H ENC
Leaf 1 automatically acknowledges the mechanical stop	Leaf 1 automatically acknowledges the mechanical stop. It will in any case be possible to stop leaf movement at any time and in the desired point by sending an OPEN A pulse.

Steps 6 and 7 with function FC:

FC = 01 (the limit switch determines the stopping of motion) the OPEN A pulse for stopping motion is ignored.

*FC = 02 (the limit switch determines the start of deceleration) with **Safecoder** installed or operator **S800H ENC** send an OPEN A pulse only after involving the closing limit switch, without **Safecoder** or with operators different than **S800H ENC**, make sure that the limit switch is engaged before the mechanical stop*

8. S5 flashes on the display: both leaves open at full speed.
9. S6 flashes on the display: both leaves close at full speed.
10. The board will automatically exit the programming menu and will display the automated system status (00) to confirm that the SETUP procedure has been completed correctly. If the procedure is not completed correctly, on the display S0 will start flashing, indicating that a new SETUP procedure must be performed.

St	**AUTOMATED SYSTEM STATUS:** You can exit programming, choosing whether or not to save the configuration you just performed. 1. set the choice: y to SAVE and EXIT the programming no to EXIT the programming WITHOUT SAVING 2. press the button **F** to confirm; at the end the display returns to visualize the **automated system status**:	y

00 = CLOSED	07 = FAIL SAFE in progress
01 = OPEN	08 = checking BUS-2EASY devices in progress
02 = Stationary then "OPENS"	09 = Pre-flash then "OPENS"
03 = Stationary then "CLOSES"	10 = Pre-flash then "CLOSES"
04 = In "PAUSE"	11 = Emergency open
05 = Opening	12 = Emergency close
06 = Closing	HP = Hold position

The above is the Status references is what will be seen under normal operation, even if the alarm LED is illuminated. To identify the error the signalling Errors and Alarms procedure should be followed.

Advanced Programming useful functions

The following parameters from Advanced Programming may also need to be changed if the SETUP continues to fail.

EC	**ANTI-CRUSHING SENSITIVITY:** Varying this function varies the amount of time after which, in case of obstacle, the board commands reversal of the leaves, or it will command a stop if the leaves are in the contact point search space (see the parameter r8). The fourth consecutive obstacle detected in the same direction and position will be defined as a contact point and the leaf will stop in that position. 01 = minimum sensitivity (maximum time before reversal) 10 = maximum sensitivity (minimum time before reversal)	01	06	05	05
US	**ULTRA-SENSITIVITY:** This function activates an obstacle detection system, based on the control of the variation of the current absorbed by the motor, causing immediate leaf reversal. y = active no = excluded	no	no	y	y

The following shows the typical wiring of a Maglock using either OUT 1 or OUT 2 with a relay and separate power supply, which are configurable as per below in Advance Programming.

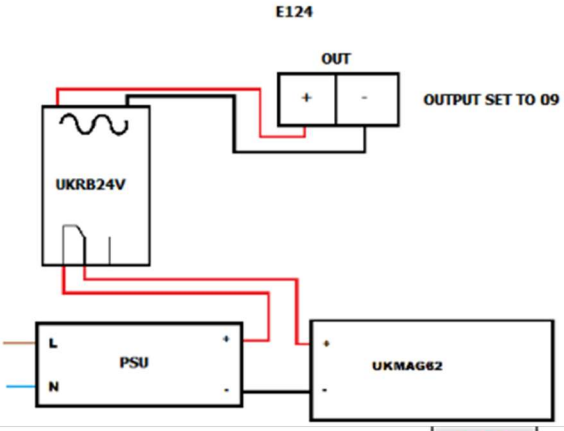

o1	**OUT 1:** You can set the output OUT1 (open collector N.O.) in one of the following functions: 00 = always active 01 = FAIL-SAFE 02 = INDICATOR LIGHT (**off** = closed; **on** = during opening and open/in pause; **flashing** = during closing) 03 = COURTESY LIGHT (stays on for the duration of the movement (even in SETUP) in addition to the set time of function t1 04 = ACTIVE ERROR 05 = automated system OPEN or in PAUSE 06 = automated system CLOSED 07 = automated system MOVING 08 = automated system in EMERGENCY 09 = automated system in OPENING 10 = automated system in CLOSING 11 = electric lock control before OPENING and before CLOSING 12 = safety device ACTIVE 13 = TRAFFIC LIGHT function (active when OPENING and with automated system OPEN) 14 = timed output which can be activated from the second radio channel OMNIDEC (see function t1) 15 = output which can be activated from the second radio channel OMNIDEC (step-by-step function) 16 = active during movement of leaf 1 17 = active during movement of leaf 2 18 = Instrusion detection 19 = System working on battery	00	00	00	00
t1	**OUT 1 TIMING (visualised only with the function o1 =03 or o1 =14):** You can adjust the timing of OUT 1 output if a timed function has been selected with a time from 1 to 59 minutes in 1-minute steps for functions 03-14	01	01	01	01
o2	**OUT 2:** You can set the output OUT2 (open collector N.O.). *See the options as o1.*	02	02	02	02
t2	**OUT 2 TIMING (visualised only with the function o2 = 03 or o2 =14):** *Adjustable as t1.*	01	01	01	01

Signalling Errors and Alarms

In case of **ERRORS** (conditions that stop gate operation) or **ALARMS** (conditions that do not compromise gate operation) it is possible to see the number related to the warning.

These warnings will disappear in the following cycle only if the situation causing them is removed.

When there is an ERROR, the ALARM LED will go on steady. When an ALARM is triggered, the ALARM LED starts to flash.

By simultaneously pressing + and - the display will show corresponding error number.

N°	ERROR	SOLUTION
01	Board broken	Replace the board
02	Thermal protection active	Wait for the board to cool down, check for overloads
03	Motor 1 faulty	Check that the motor works and that the wiring is not interrupted or damaged
04	Motor 2 faulty	
05	Invalid SETUP	Repeat board SETUP
08	BUS-2EASY device error	Ensure that no two pairs of devices have the same address.
09	BUS-2EASY output short-circuit	Check the connections of the connected and entered BUS-2EASY devices
10	Motor 1 limit switch error	Check the limit switch connections for motor 1
11	Motor 2 limit switch error	Check the limit switch connections for motor 2
12	BUS-2EASY call	Ensure that the BUS devices are operating correctly and, if necessary, repeat BUS device acquisition
13	FAIL SAFE	Check that the safety devices (photocells) are operating correctly
14	Configuration error	Check that the board is configured correctly (basic and advanced programming) and, if necessary, repeat SETUP
15	Movement timeout reached	Check that the motors are blocked; check that any limit switches are activated correctly and that the mechanical stops are present.
16	Deep sleep	The board is in advanced energy-saving mode. No action required.
17	Motor 1 encoder fault	Check the connections or replace motor 1 encoder
18	Motor 2 encoder fault	Check the connections or replace motor 2 encoder
19	Incorrect memory data	Repeat BUS-2EASY device entry and/or re-program the board
45	Battery operation	No action required.
93	High absorption at +24V	Check that absorption by the accessories connected is within permitted limits

N°	ALARM	Solution/Description
20	Obstacle on MOTOR 1 (only with encoder)	Remove any possible obstacle on leaf 1
21	Obstacle on MOTOR 2 (only with encoder)	Remove any possible obstacle on leaf 2
22	MOTOR 1 current limited	Check the force set on motor 1
23	MOTOR 2 current limited	Check the force set on motor 2
25	LOCK 1 output short-circuit	Remove the cause of the short-circuit
26	LOCK 2 output short-circuit	Remove the cause of the short-circuit
27	Nr. of consecutive obstacles exceeded during opening	Remove any possible obstacle. Should the problem persist, repeat SETUP
28	Nr. of consecutive obstacles exceeded during closing	Remove any possible obstacle. Should the problem persist, repeat SETUP
30	XF radio code memory full	Cancel the radio codes that are not being used using the PC program or use an additional DEC/MINIDEC/RP module
31	Tampering alarm	Movement was performed with automation in status St= 00 or 01. Perform a manoeuvre cycle.
32	Emergency active	Check that the emergency input is not active (configuration only possible from PC/Mac)
35	TIMER active and TIMER function operating:	TIMER function is operating
40	Service request	Contact the installer for maintenance
50	The HOLD POSITION is operating (active on PC/MAC)	HOLD POSITION function is operating
60	TIMER active and error in TIMER data	Reload a correct TIMER configuration with the PC/MAC programme
62	Loss of time and date on the board (only if the TIMER is operating)	Reload the time and date with the PC/MAC programme and replace the BAT1 - CR2032 buffer battery
63	JOLLY TIMER is activated	JOLLY TIMER is enabled by terminal board J3
64	TIMER DISABLED is operating	TIMER is disabled by terminal board J3

Programming Remote Controls using the XF Receiver and OmniDec

Programming a new remote control to a new E124 System

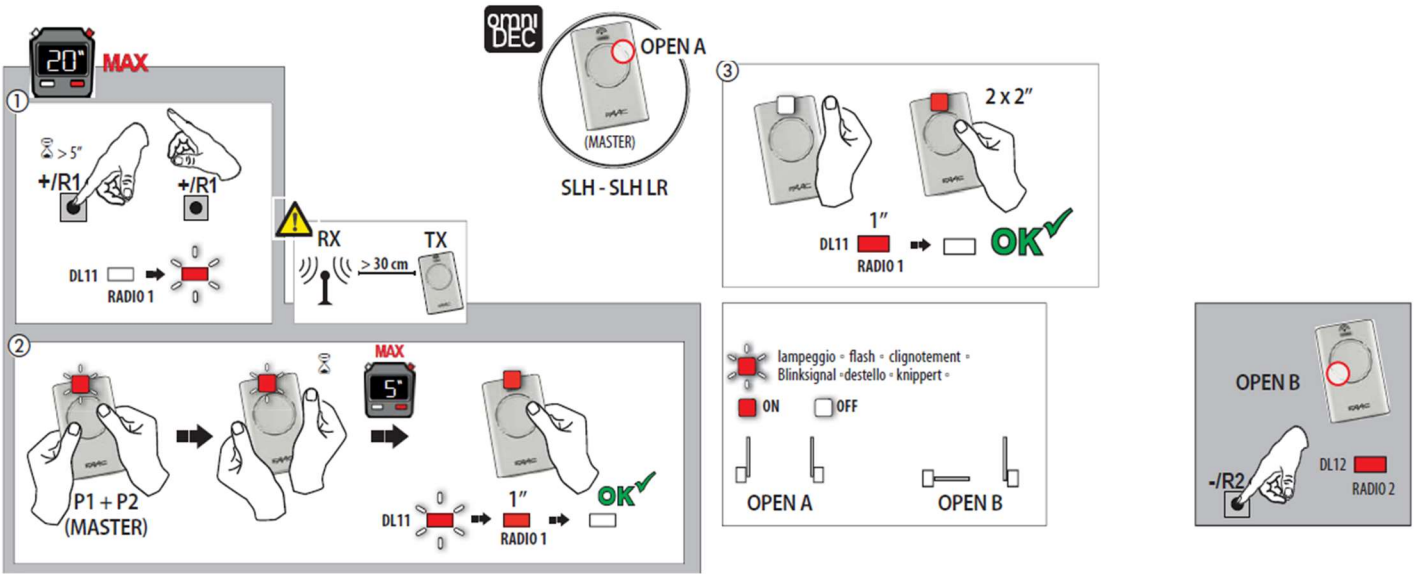

Programming a new remote control from a working master remote control

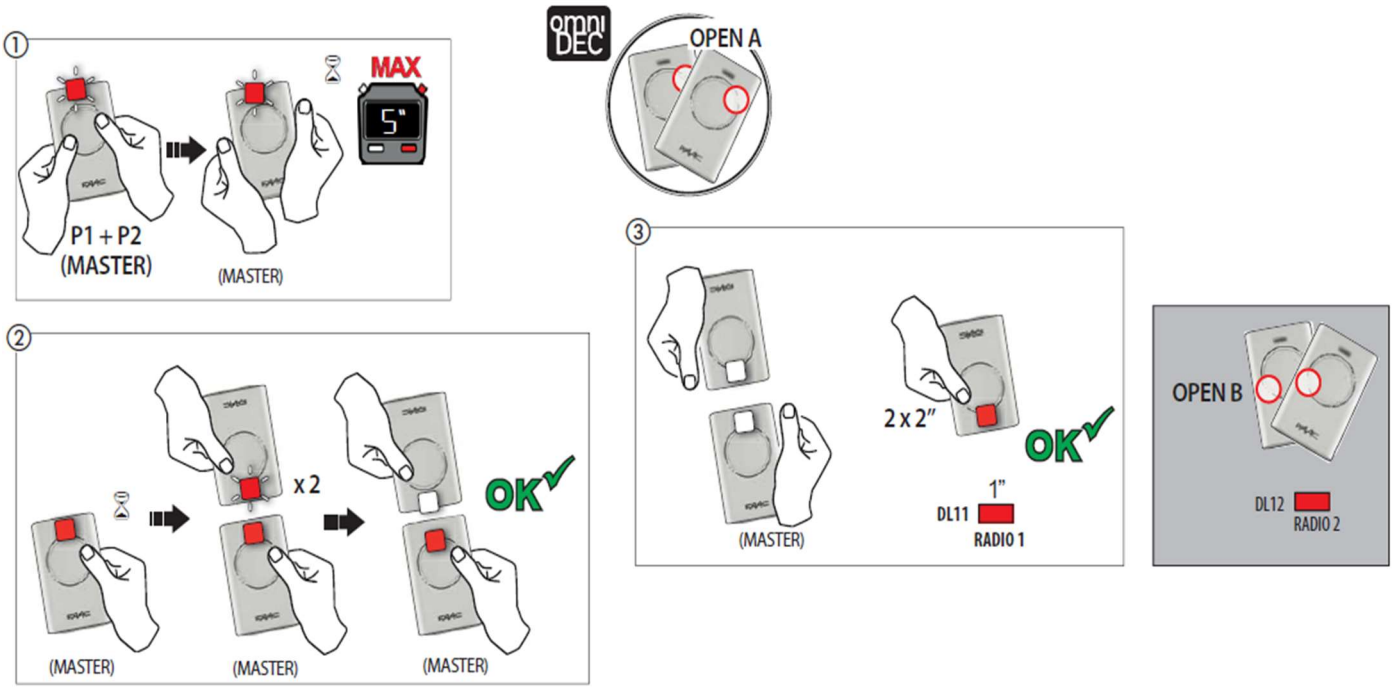

Tutorial Videos available for programming remote controls

FAAC UK have created tutorial videos to assist the installer in the programming of remote controls. Please use the link below to navigate straight to our "YouTube" Channel or use your preferred web browser and navigate to "youTube.com" and search for "FAAC UK" and select our channel and look for the videos required.

https://www.youtube.com/user/FAACUK