746 C - 844 C

EN

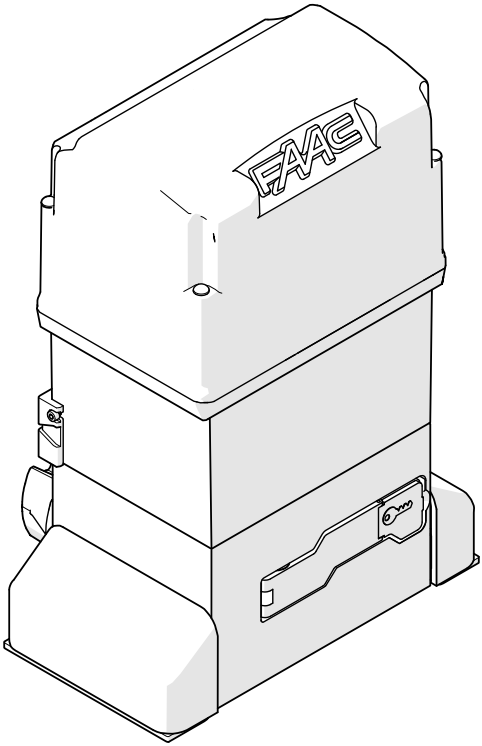

safe zone FDS omni DEC 2easy SIMPLY CONNECT

FAAC

FAAC S.p.A. Soc. Unipersonale
Via Calari, 10 - 40069 Zola Predosa BOLOGNA - ITALY
Tel. +39 051 61724 - Fax +39 051 09 57 820
www.faac.it - www.faactechnologies.com

This manual was published in 2024.

CONTENTS

TABLES

APPENDICES

1. INTRODUCTION TO THE INSTRUCTION MANUAL

This manual provides the correct procedures and requirements for installing 746 C - 844 C and maintaining it in a safe condition.

In Europe, the automation of a gate falls under the Machinery Directive 2006/42/EC and the corresponding harmonised standards. Anyone automating a gate (new or existing) is classified as the Manufacturer of the Machine. They are therefore required by law, among other things, to carry out a risk analysis of the machine (automatic gate in its entirety) and take protective measures to fulfil the essential safety requirements specified in Annex I of the Machinery Directive.

FAAC S.p.A. recommends that you always comply with the EN 12453 standard and in particular that you adopt the safety criteria and devices indicated, without exception, including the dead-man function.

This manual contains references to European standards. The automation of a gate must fully comply with any laws, standards and regulations applicable in the country where installation will take place.

Unless otherwise specified, the measurements provided in the instructions are in mm.

SAFETY WARNINGS FOR THE INSTALLER

Before starting the installation, read and comply with the "Safety warnings for the installer" booklet supplied with the product, and these installation instructions.

MEANING OF THE SYMBOLS USED

NOTES AND WARNINGS ON THE INSTRUCTIONS

WARNING - Details and specifications which must be respected in order to ensure that the system operates correctly.

RECYCLING AND DISPOSAL - The materials used in manufacturing, the batteries and any electronic components must not be sent to landfill. They must be taken to authorised recycling and disposal centres.

FIGURE E.g.: **1**-3 see Figure 1 - item 3.

TABLE E.g.: **1** see Table 1.

§ CHAPTER/SECTION E.g. § 1.1 see section 1.1.

2. 746 C - 844 C

2.1 UNPACKING AND HANDLING

1. Open the package and remove the contents.
   - Do not lift the gearmotor by the cover or the electronic board. Grip the body of the gearmotor using the handholds **A**.
2. Check that all components are present and intact (See § Component identification).

1	Gearmotor
2	Gearmotor bracket guards and Hardware/accessories
3	Limit switches
4	Supplied documentation

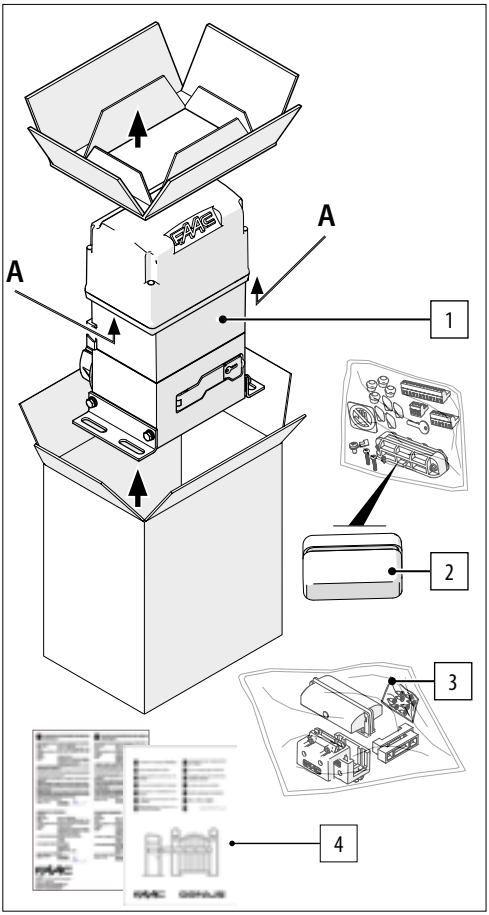

VENT CLOSURE

The gearmotor is supplied with the vent hole closed with a screw and washer.

Whenever it is handled, the vent must be closed to prevent oil leaking out.

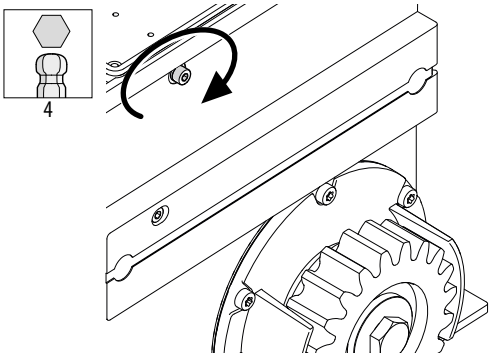

2.2 PRODUCT IDENTIFICATION

The product is identified by the plate.

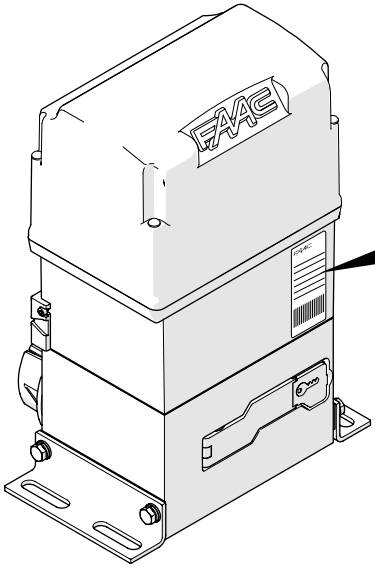

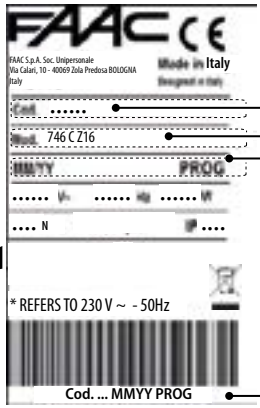

1

MARKINGS ON THE PRODUCT

Adhesive sign on the casing. It indicates the breather screw that must be removed before start-up.

The adhesive sign must be placed on the casing by the installer. It indicates the risk of trapping fingers / hands due to the rotation of the pinion.

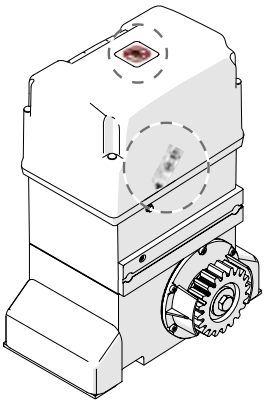

2.3 INTENDED USE

FAAC series 746 C - 844 C gearmotors have been designed to control motorized horizontal movement sliding gates intended for installation in areas that are accessible to people, the main purpose of which is to provide safe access for goods, vehicles and people to industrial, commercial or residential buildings.

Only one gearmotor must be installed for each leaf. The system requires a special foundation plate (supplied separately) to be embedded in a plinth. The gate must be moved via a drive pinion and a rack (supplied separately).

To move the gate manually, follow the instructions in section § Manual operation.

Any other use that is not expressly specified in these instructions is prohibited and could affect the integrity of the product and/or represent a source of danger.

2.4 LIMITATIONS OF USE

The maximum force required to move the leaf by hand over its entire length of travel must be 225 N for residential areas and 260 N for industrial or commercial areas.

The maximum force required to start the movement must be less than the maximum torque at initial thrust of the operator indicated in the technical data.

The leaf must fall within the dimensional and weight limits indicated in the technical data.

The presence of weather conditions such as snow, ice and strong wind, even occasional, could affect the correct operation of the automation, the integrity of the components and be a potential source of danger (see § Emergency use).

746 C - 844 C is not designed to be a security (break-in protection) system.

If there is a pedestrian access gate integrated in the leaf of the gate, the motorised movement must be disabled when the pedestrian gate is not in a safe position.

The installation must be visible during the day and at night. If it is not, appropriate solutions must be provided to make the fixed and moving parts visible.

Implementing the automation requires the installation of the necessary safety devices, identified by the installer through an appropriate risk assessment of the installation site.

2.5 UNAUTHORISED USE

- Uses other than the intended use are prohibited.
- It is prohibited to install the automation system outside of the limits specified in the Technical Data and in the Mechanical and Electrical Installation Requirements.
- It is forbidden to use 746 C - 844 C in a constructional configuration other than the one provided by the manufacturer.
- No component part of the product may be modified.
- It is prohibited to install the automation system on escape routes.
- It is prohibited to install the automation system to create fire doors.
- It is prohibited to install the automation system in environments in which there is a risk of explosion and/or fire: the presence of flammable gases or fumes is a serious safety hazard (the product is not ATEX certified).
- It is prohibited to power the system with energy sources other than those specified.
- It is prohibited to integrate commercial systems and/or equipment other than those specified, or use them for purposes not intended and authorised by their respective manufacturers.
- Do not allow water jets of any type or size to come into direct contact with the gear motor.
- Do not expose the gear motor to corrosive chemicals or atmospheric agents.
- It is prohibited to use and/or install accessories which have not been specifically approved by FAAC S.p.A.
- It is prohibited to use the automation system before performing commissioning.
- It is prohibited to use the automation system in the presence of faults which could compromise safety.
- It is prohibited to use the automation system with the fixed and/or mobile guards removed or altered.
- Do not use the automation system unless the area of operation is free of persons, animals or objects.
- Do not enter/remain in the area of operation of the automation system while it is moving.
- Do not try to prevent the movement of the automation system.
- Do not climb on, hold onto or let yourself be pulled by the leaf. Do not climb onto the gear motor.
- Do not allow children to approach or play in the area of operation of the automation system.
- Do not allow the control devices to be used by anyone who is not specifically authorised and trained to do so.
- Do not allow the control devices to be used by children or persons with mental and physical deficiencies unless they are supervised by an adult who is responsible for their safety.
- During manual operation, gently guide the leaf the whole way, do not push it and let it slide freely.

2.6 EMERGENCY USE

In emergencies or if there is a fault, turn off the power supply to the automation. If the leaf can be moved safely by hand, use the MANUAL OPERATION mode; otherwise place the automation out of service until it has been reset/repaired.

In the case of a breakdown, the automation must be reset/repaired exclusively by the installer/maintenance technician.

2.7 MANUAL OPERATION

In order to operate the leaf manually, the gearmotor has to be released using the lever with key.

RELEASING THE GEARMOTOR

1. Open the lock cover.
2. Insert the key and turn it clockwise by 90°.
3. Open the release lever by 90°.

RESTORING OPERATION

4. Close the release lever.
5. Turn the key so that it is vertical and remove it.
6. Close the lock cover.

Move the leaf manually to make sure that the mechanical system meshes correctly.

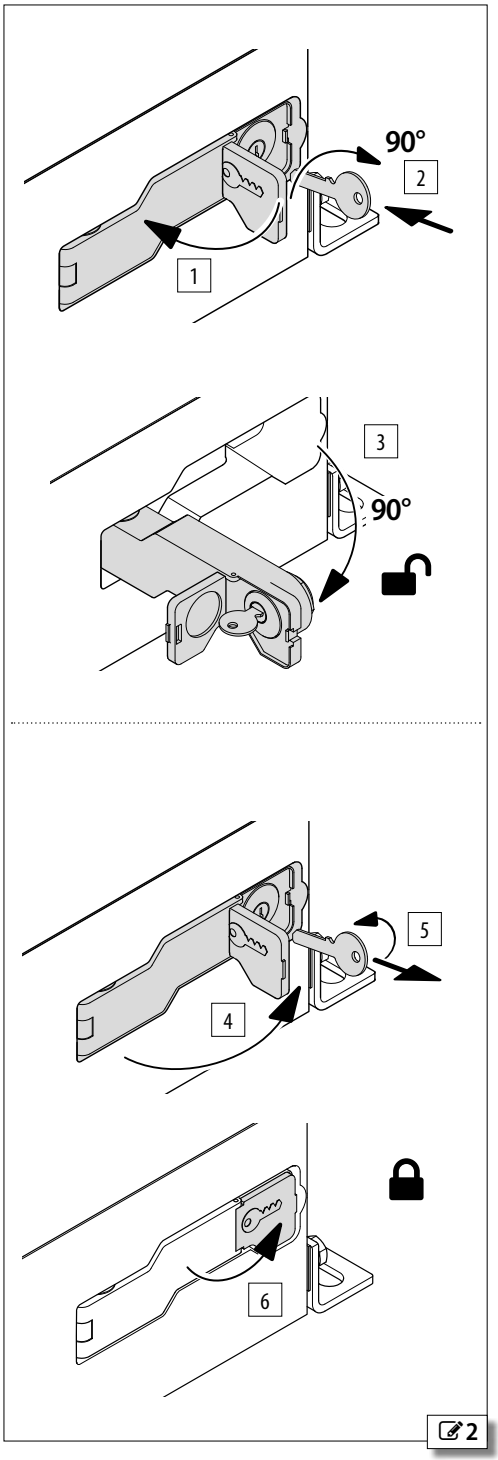

2.8 TECHNICAL SPECIFICATIONS

The product is an electromechanical gearmotor supplied with a built-in E781 electronic board and a pinion for the rack.

VERSIONS

The versions differ according to the type of motor, capacitor and pinion (Z16 or Z20) and the power supply 230V / 115V:

■ **746 C Z16, 746 C Z20, 844 C Z16, 844 C Z16 115V**

IRREVERSIBLE SYSTEM

In order to be operated manually, the gearmotor has to be released using the lever with key.

OIL-BATH LUBRICATION

Oil bath lubrication ensures very silent operation, high heat dissipation and reduced wear and high frequency of use.

MAGNETIC OPENING/CLOSING LIMIT SWITCHES

Magnetic limit switches are highly reliable, due to the absence of moving mechanical parts and micro switches.

■ **ELECTRONIC BOARD E781**

The electronic board is equipped with a display, programming buttons and a protective plastic cover.

The safety functions to protect the primary edge according to EN 12453 are described in the dedicated section.

MAGNETIC ENCODER

The high resolution encoder determines the position of the leaf and the speed of movement.

TIMEOUT

The maximum actuation time is defined by the board according to the stroke detected.

ADJUSTABLE SPEED

The speed can be set in the programming.

ADJUSTABLE SENSITIVITY OBSTACLE DETECTION

The encoder makes it easier to detect obstacles during opening or closing.

FORCE LIMITATION and SPEED AND END OF TRAVEL SLOWDOWN

These electronic adjustments allow the impact forces to fall within the limits indicated by current regulations. Adjustable electronic slowdown near to the open and closed positions limits inertial forces and reduces the vibrations of the gate when it is stopping.

PROGRAMMING FROM THE BOARD

Programming from the board is via the display and dedicated buttons and has a BASIC and ADVANCED menu.

2 PROGRAMMABLE OUTPUTS

DIAGNOSTICS

Via LEDs and the display.

FORCED COMMANDS

The electronic board has inputs for forced opening/closing control devices. The photocells and safety devices do not trigger during movements made with forced commands.

SENSITIVE EDGES

Sensitive edges with an NC contact or 8.2 kΩ resistive edges can be connected.

2-LEAF CONFIGURATION

It possible to install 2 automations with opposed synchronous movement.

Bus 2Easy

FAAC Bus 2Easy devices (photocells, sensitive edges and control devices) can be connected.

RADIO SYSTEM

The electronic board is fitted with an integrated two-channel decoding system that requires either a XF FDS or XF radio module to be installed, to allow various types of FAAC radio controls to be memorised.

In addition, a quick insertion (5 pin) connector for FAAC radio/decoder boards is available.

Simply Connect

This cloud platform allows remote communication with the automation and includes additional programming options. Simply Connect requires a connectivity module (ACCESSORY) to plug in to the electronic board.

XUSB

This plug-in module (ACCESSORY) allows you to load the FW of the board using a USB memory device.

SAFETY FUNCTIONS

■ **Specifying the minimum levels of protection of the primary edge (EN 12453)**

ACTIVATION TYPE	TYPE OF USE		
	Trained users and unlikely presence of the general public	Trained users and probable presence of the general public	Untrained users
Dead-man mode	**To**	**B**	not allowed
Pulse activation with the automation visible	**C / E**	**C / E**	**(C + D) / E**
Pulse activation with the automation not visible	**C / E**	**(C + D) / E**	**(C + D) / E**
Automatic mode	**(C + D) / E**	**(C + D) / E**	**(C + D) / E**

To Dead-man mode of operation with non self-latching control device.

B Dead-man mode of operation with non self-latching control device with key-operated switch or similar device.

C Force limitation, either by force-limiting devices or by sensitive protective devices

D Additional device to reduce the likelihood of contact between a person or obstacle and the mobile leaf used in combination with force limitation (**C**)

E Sensitive presence detection protection device, designed and installed in such a way that a person cannot be touched by the moving leaf

■ Safety functions of E781

Inputs	Programming	Functions	Protection type according to EN 12453	Device performance level	E781 performance level
OP_H CL_H	So, Sc	Dead-man command without latching	A or B	–	Pl c Category 2
FSW OP FSW CL	Failsafe enabled on OUT1/OUT2 IF = 1/2/3 o1/o2 = 01	Contact prevention using presence detection devices (ESPE)	E	Pl c Category 2	Pl c Category 2
	Failsafe enabled on OUT1/OUT2 IF = 1/2/3 o1/o2 = 01 Ph = no, Op = Y	Force limitation by means of sensitive edges with NC contact (PSPE)	C		
EDOP+ EDOP - EDCL+ EDCL -	OE, CE = 1r/2r/3r/4r	Force limitation by means of resistive sensitive edges 8.2 kΩ (PSPE)	C	Pl c Category 2	Pl c Category 2
	OE, CE = nc Failsafe enabled on OUT1/OUT2 3F = 1/2/3 o1/o2 = 01	Force limitation by means of sensitive edges with NC contact and TEST input (PSPE)			
STOP	Failsafe=enabled on OUT1/OUT2 2F = 1 o1/o2 = 01	Safety STOP for pedestrian door integrated in the sliding leaf or Contact prevention using presence detection devices (ESPE)	E	–	Pl c Category 2
Encoder	EC = 01/02/03 F0, So, Sc, ro, rc, dS	Intrinsic force limitation	C	–	Pl c Category 2
BUS 2easy	BUS 2easy sensitive edges	Force limitation by means of sensitive edges BUS 2easy (PSPE)	C	Pl c Category 2	Pl c Category 2

■ Additional protection functions

Inputs	Programming	Functions	Protection type according to EN 12453	Device performance level	E781 performance level
FSW OP FSW CL	Failsafe enabled on OUT1/OUT2 IF = 1/2/3 o1/o2 = 01 or Periodic inspection at a minimum interval of 6 months	Additional devices to reduce the likelihood of contact	D	–	–
Bus 2EASY	BUS 2easy photocells	Additional devices to reduce the likelihood of contact	D	–	–

TECHNICAL DATA

	746 C Z16 data referring to 230 V~ @50 Hz	**746 C Z20** data referring to 230 V~ @50 Hz
Power supply voltage	220 - 240 V~ @50/60 Hz	220 - 240 V~ @50/60 Hz
Max power	300 W	300 W
Pinion	Z16 Module 4	Z20 Module 4
Max torque at initial thrust	466 N	372 N
Max thrust force	830 N	665 N
Max leaf weight	600 kg	400 kg
Max leaf speed	9.6 m/min	12 m/min
Max leaf length	40 m	50 m
Stopping space	30 mm	30 mm
Type of use	Industrial/Commercial/Residential	Industrial/Commercial/Residential
Use frequency	Continuous use	Continuous use
Protection rating	IP44	IP44
Ambient operating temperature	-20°C - +55°C	-20°C - +55°C
Thrust capacitor	12.5 µF	12.5 µF
Thermal protection	120°C automatic rearming	120°C automatic rearming
Gearmotor weight	16.2 kg	16.5 kg
Oil	supplied by FAAC	supplied by FAAC

	844 C Z16 data referring to 230 V~ @50 Hz	**844 C Z16 115V** data referring to 115 V~ @60 Hz
Power supply voltage	220 - 240 V~ @50/60 Hz	110 - 120 V~ @50/60 Hz
Max power	500 W	800 W
Pinion	Z16 Module 4	Z16 Module 4
Max torque at initial thrust	606 N	619 N
Max thrust force	1300 N	1275 N
Max leaf weight	1800 kg	1800 kg
Max leaf speed	9.6 m/min	11.7 m/min
Max leaf length	40 m	40 m
Stopping space	30 mm	30 mm
Type of use	Industrial/Commercial/Residential	Industrial/Commercial/Residential
Use frequency	Continuous use	Continuous use
Protection rating	IP44	IP44
Ambient operating temperature	-20°C - +55°C	-20°C - +55°C
Thrust capacitor	18 µF	70 µF
Thermal protection	120°C automatic rearming	120°C automatic rearming
Gearmotor weight	16.9 kg	16.9 kg
Oil	supplied by FAAC	supplied by FAAC

OPERATION IN AMBIENT OPERATING TEMPERATURE OF 65°C

746 C - 844 C the 230V version can operate at temperatures from 55 to 65°C under the following conditions.

	746 C Z16/844 C Z16	746 C Z20
Use frequency	28 cycles/h*	36 cycles/h*
Max. load on accessories load including Bus 2Easy accessories	400 mA (instead of 500 mA)	400 mA (instead of 500 mA)

* The cycles/hour refer to a leaf of maximum weight and 5 m wide.

2.9 COMPONENT IDENTIFICATION

COMPONENTS SUPPLIED

Gearmotor	
1	Casing
2	Electronic board E781 with protective cover
3	Thrust capacitor (inside the half-body)
4	Limit switch sensor
5	Pinion (Z16/Z20 Module 4) with hand guard
6	Encoder
7	Oil filler plug
8	Earth connector
9	Gearmotor body
10	Release lever with key
11	Mounting brackets
Hardware/accessories	
12	Gearmotor bracket guards
13	Cable glands to install in the cable compartment
14	Screws and screw covers for the cover, terminal boards, cable lug for earth cable and adhesive hazard warning sign, release key
15	Closing and opening magnetic limit switches
16	Supplied documentation (hard copy and online)

COMPONENTS SUPPLIED SEPARATELY

The installation requires the following components FAAC.

17	Nylon rack with mounting hardware (for leaves weighing up to 400 kg max) and Self-tapping screw kit/Steel rack with spacers (for leaves weighing more than 400 kg)
18	
19	Foundation plate with mounting hardware
DANGER, AUTOMATIC MOVEMENT warning sign	

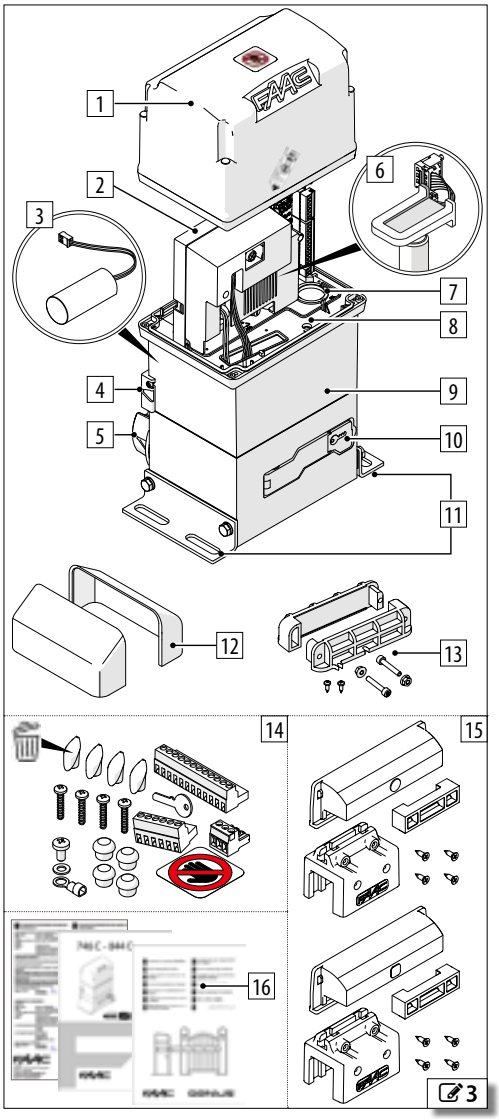

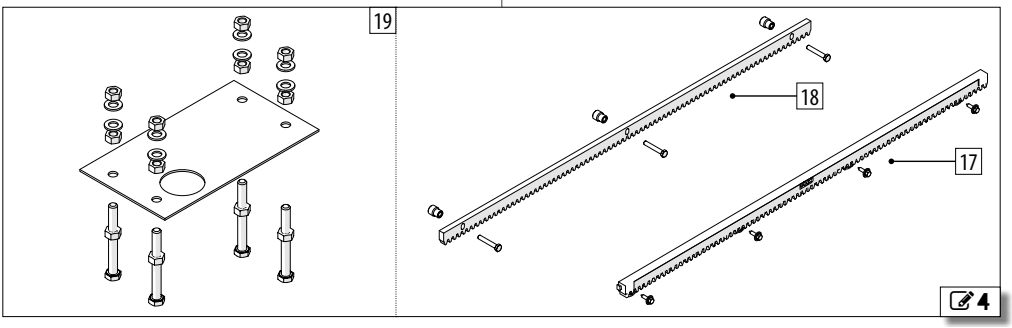

2.10 DIMENSIONS

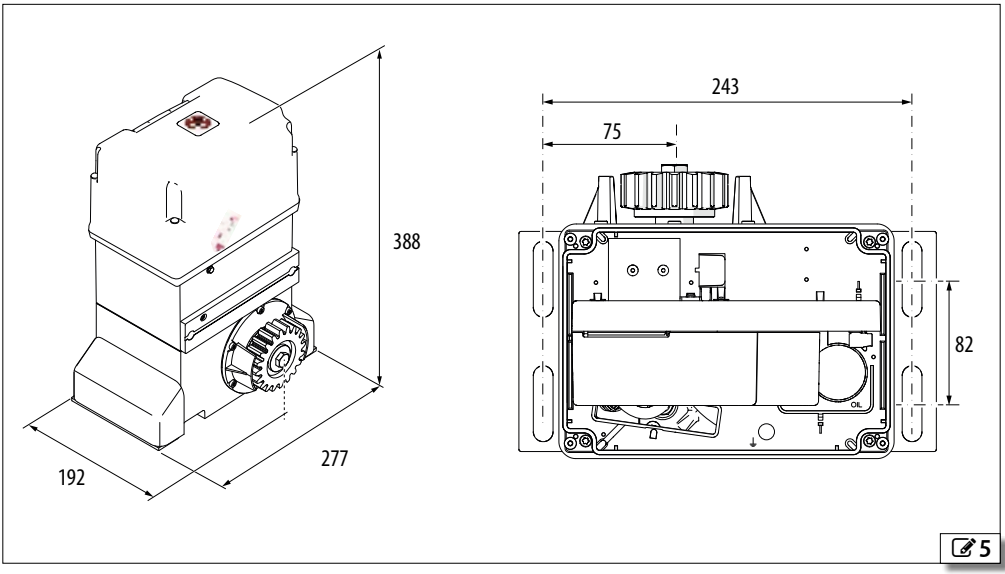

2.11 EXAMPLE SYSTEM

The example is an illustration only and is just one of the possible applications.

1	Mains power supply	3G 1.5 mm² (max 2.5 mm²)
2	Circuit breaker and differential switch	
3	Junction box	
4	Gearmotor	
5	Photocell TX	
6	Photocell RX	
7	Key button	
8	Flashing light	
9	Mechanical stop	

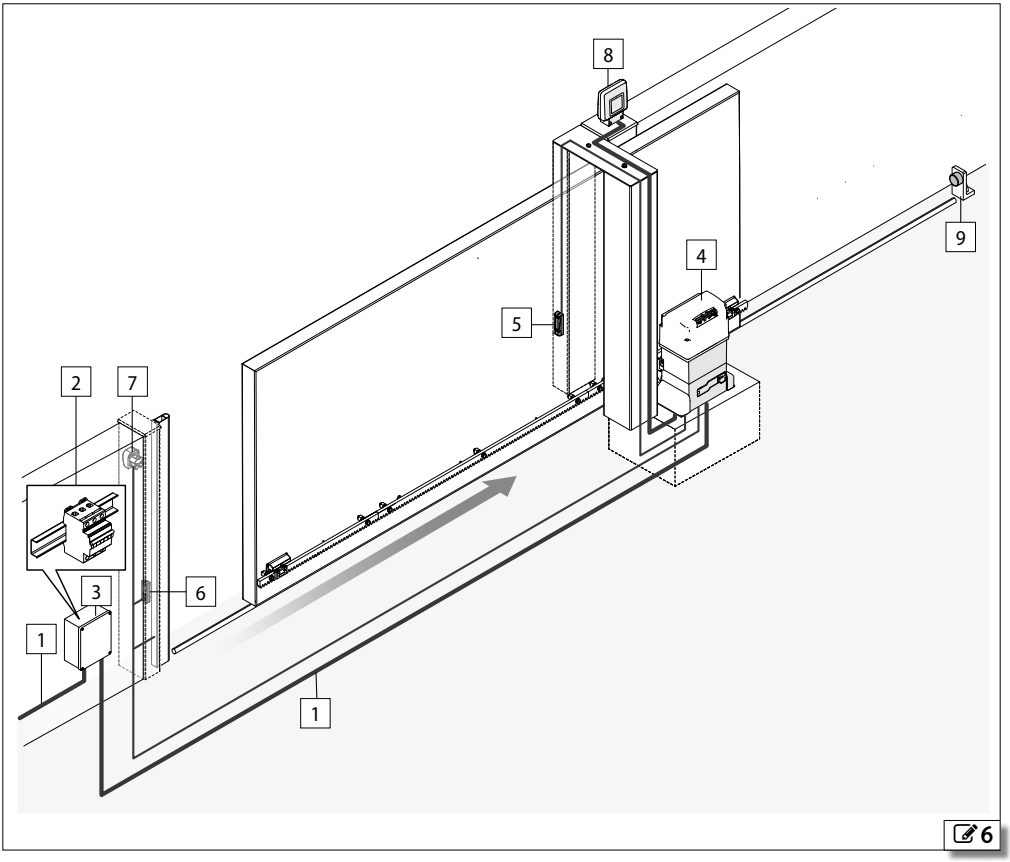

2.12 INSTALLATION DIMENSIONS

■ **FOUNDATION PLATE**

Opening to the left

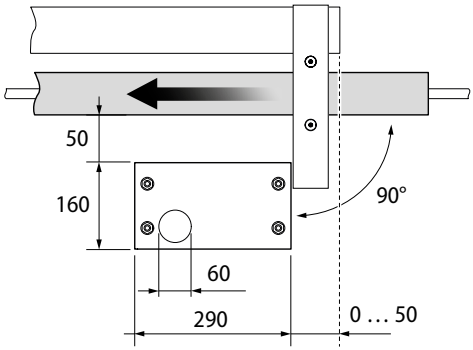

Opening to the right

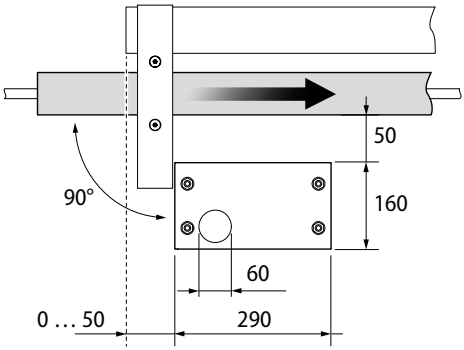

Height of the upper edge of the pinion from the ground.

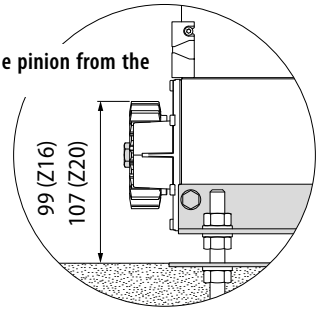

■ **Steel rack**

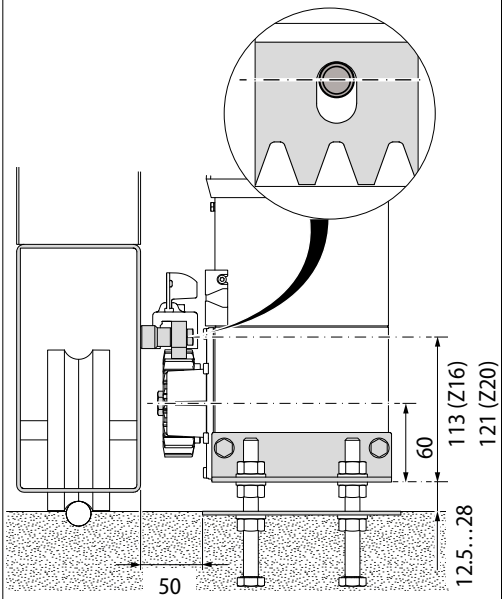

■ **Nylon rack**

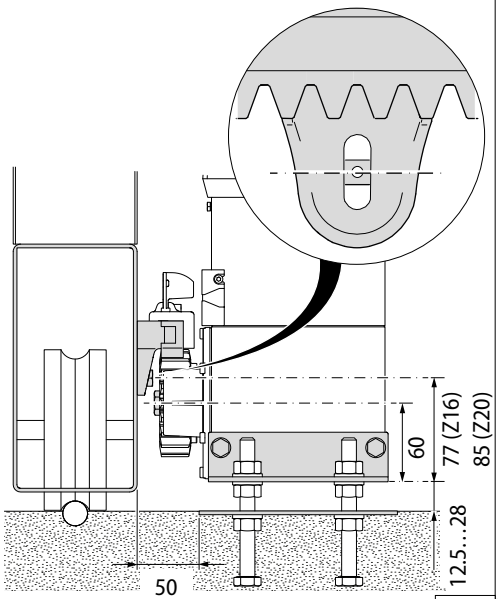

7

3. MECHANICAL INSTALLATION

TOOLS REQUIRED

The tools required are indicated below.

Spanner 7-19	Phillips screwdrivers 3, 8
Level	Angle grinder
Screw clamp	Welder (for steel rack to be welded on)
Drill bit for metal 5, 6.5	Thread cutter (for screw-on steel rack) M8

TORQUE ADJUSTMENT - comply with fastening torque indicated in the figure. E.g.: Spanner 7 set at 2.5 Nm

7 2.5 Nm

3.1 INSTALLING THE FOUNDATION PLATE

The product must be installed with the foundation plate.

Before proceeding, the cable conduits must be laid.

1. Assemble the foundation plate.
2. Make the hole in the ground.
   - Make sure that the cable conduits protrude by approximately 15 cm, in the correct position with respect to the gearmotor and fill will concrete.
3. Place the plate at the centre of the foundation, leaving its surface uncovered.
   - Clean any concrete from the surface of the plate and the nuts with washers so that they can be subsequently adjusted.
   - Check the plate is horizontal using a spirit level.
4. Wait for the concrete to set.

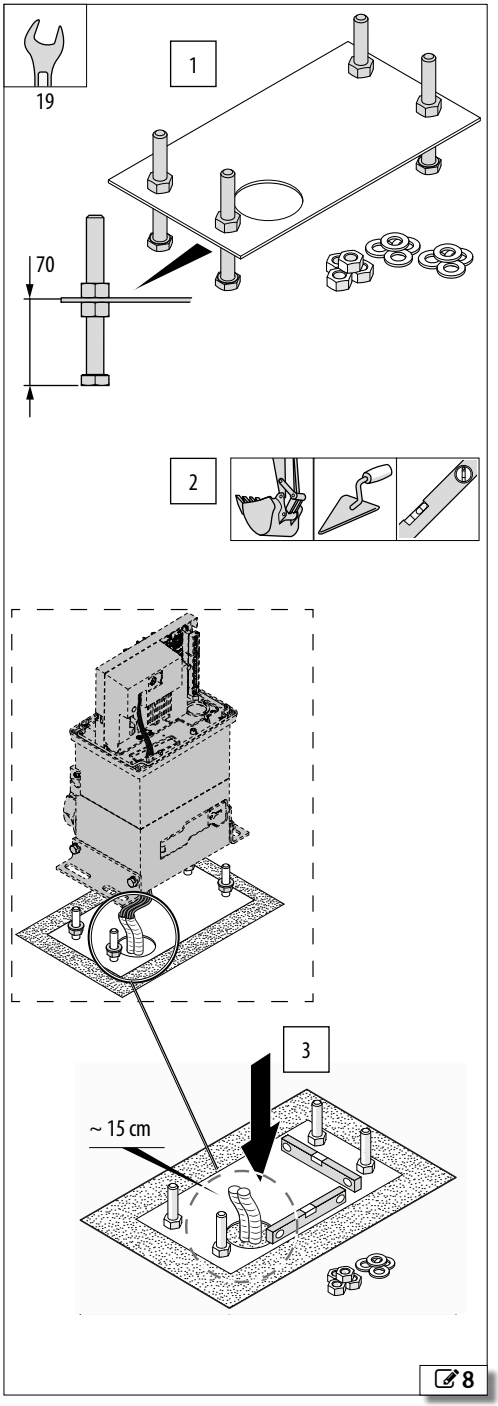

3.2 INSTALLING THE GEARMOTOR

1. Make sure that the concrete of the plinth has set completely, then adjust all the support nuts to the height indicated in figure (**H**).
2. Place the washers on the nuts. Remove the cover from the gearmotor. Position the gearmotor in correspondence with the 4 fasteners.
   - Pass the electric cables through the hole on the base so that they protrude by approximately 70 cm.

Be careful not to damage the electrical cable tubes.

3. Make sure that the gearmotor is level. Insert the washers and nuts.
   - Do not tighten the nuts so that the height can be adjusted when the rack is being installed.

OPEN THE VENT HOLE

Open the vent hole by removing the screw and washer.

A few drops of oil may leak out after the vent hole has been opened, even due to the initial movements.
Keep the screw and washer (**A**) as they will have to be reinstalled before removing the gearmotor, if necessary.

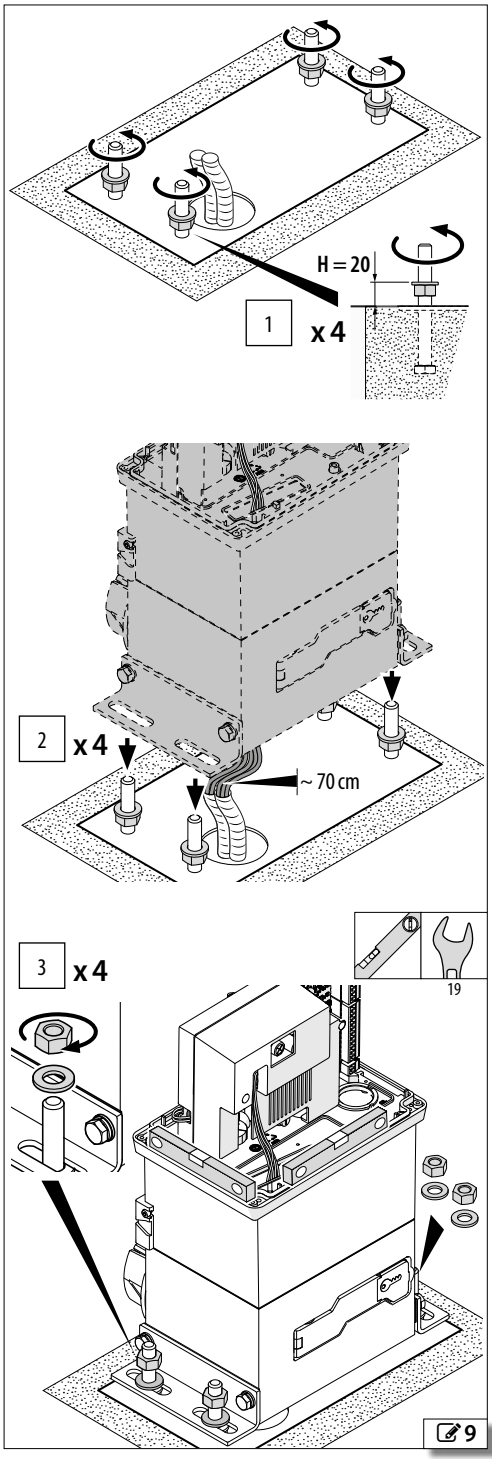

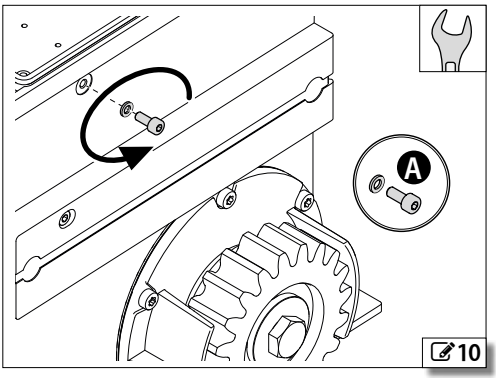

3.3 INSTALLING THE RACK

- DO NOT weld the spacers onto the racks.
- DO NOT weld the elements of the rack together.
- DO NOT apply grease or other lubricants to the racks.

STEEL RACK - WELD-ON FASTENINGS

Rack thickness: 8 mm for leaves weighing up to 400 kg max, 12 mm for leaves weighing more than 400 kg.

1. Screw 3 spacers onto each element of the rack, positioned so that they touch the top of the slots.

   Open the leaf manually.
2. Rest an element on the pinion. Check that it is horizontal and secure it to the leaf using a screw clamp.
3. Weld the first spacer to the leaf and then move the leaf with the rack resting on the pinion. Make sure that it is horizontal and weld on the other spacers.

Protect the gearmotor from weld spatter. DO NOT connect the earth of the welder to the gearmotor.

4. Move the leaf. Connect the next element (use screw clamps and a support). Rest it on the pinion, make sure that it is horizontal, and weld the spacers. Remove the clamps and repeat the procedure to complete the rack.

If an element of the rack has to be shortened, cut it with an angle grinder so that you leave two fastening points.

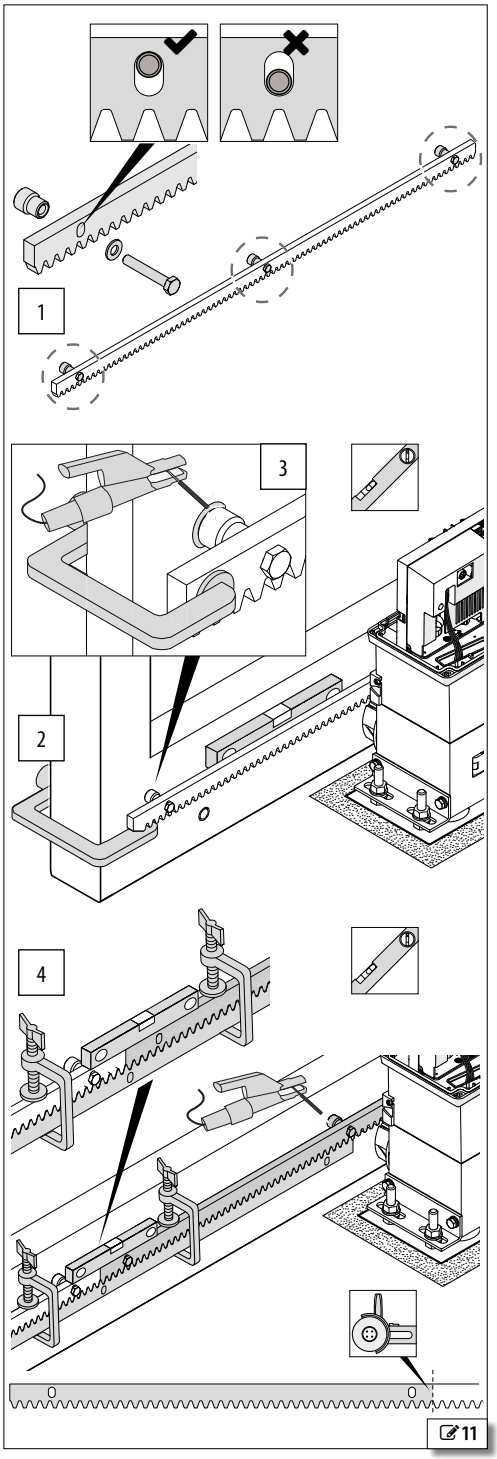

STEEL RACK - SCREW-ON FASTENINGS

Rack thickness: 8 mm for leaves weighing up to 400 kg max 12 mm for leaves weighing more than 400 kg.
The rack installation accessories contain screws for aluminium or steel leaves. Use specific screws for other materials.

1. Open the leaf manually. Rest an element on the pinion. Place a spacer between the rack and the leaf so that it touches the top of the slot. Check that it is horizontal. Mark the position of the hole to be drilled on the leaf.
2. Drill the hole and make a thread in it.
3. Fasten using the screw and washer. Move the leaf with the rack resting on the pinion. Make sure that it is horizontal and fasten the other spacers.
4. Move the leaf manually. Connect the next element (use screw clamps and a support).
5. Rest it on the pinion, make sure that it is horizontal, and fasten the spacers.

Remove the clamps and repeat the procedure to complete the rack.

If an element of the rack has to be shortened, cut it with an angle grinder so that you leave two fastening points.

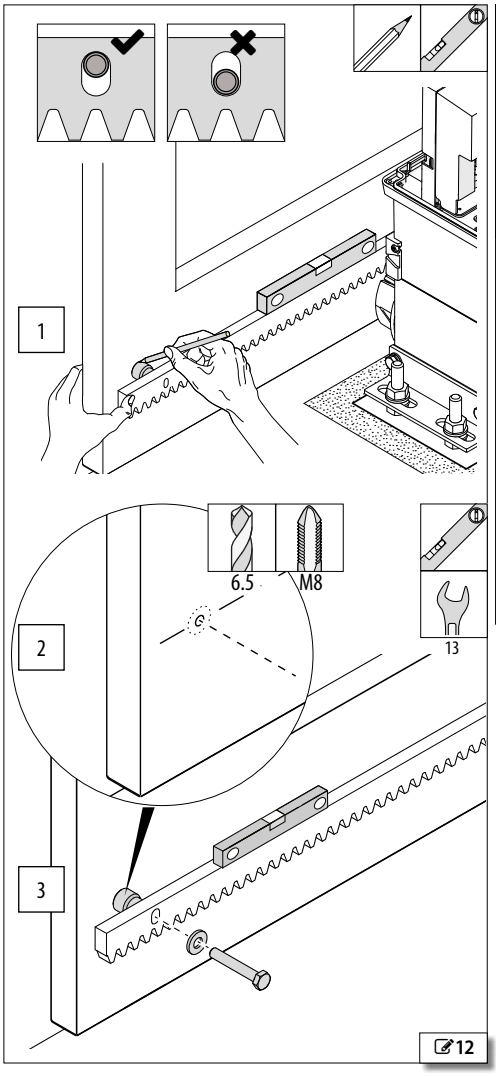

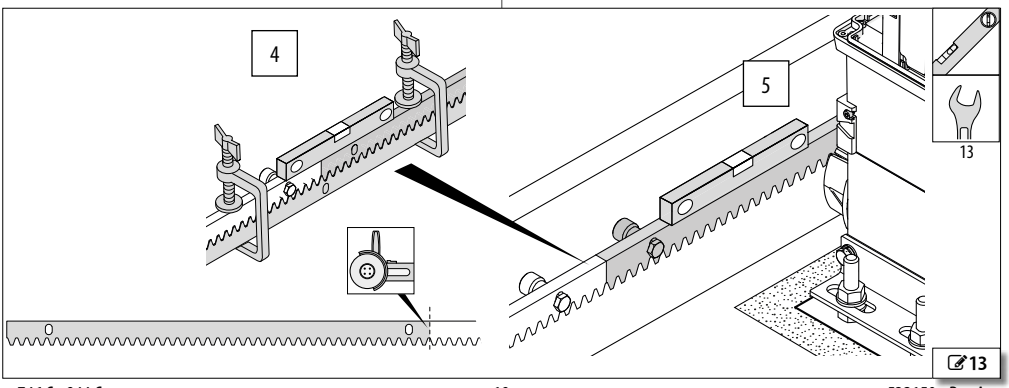

NYLON RACK

Rack thickness: 20 mm for leaves weighing up to 400 kg max.

1. Close the leaf manually. Rest an element of the rack on the pinion. Make sure that it is horizontal using a spirit level.
2. Drill holes at the centre of the slots.
3. Fasten using suitable screws and washers.

Self-tapping screws and washers are available for aluminium or steel and should be ordered separately.

4. Move the leaf manually. Install the next interlocking section at the end of the previous one and rest it on the pinion. Make sure that it is horizontal using a spirit level.
5. Drill holes at the centre of the slots.
6. Fasten using suitable screws and washers.

Repeat the procedure to complete the rack.

If an element has to be shortened, cut it with an angle grinder so that you leave two fastening points.

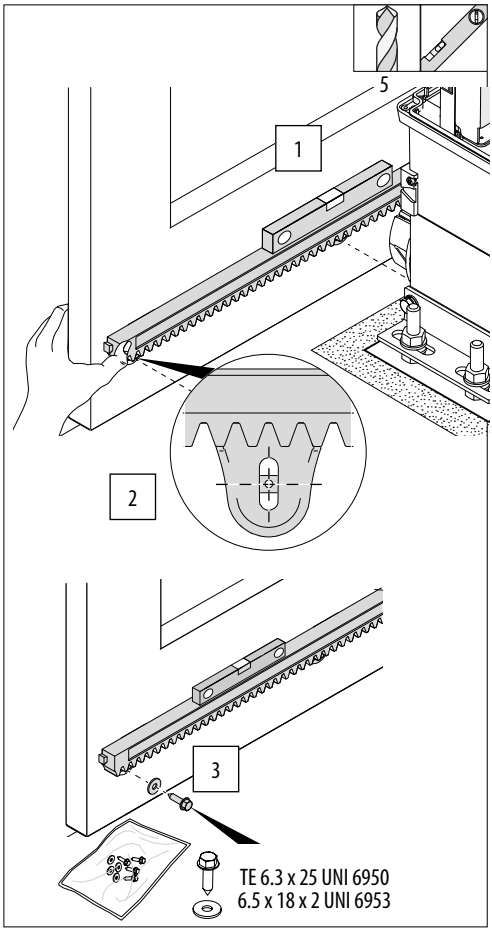

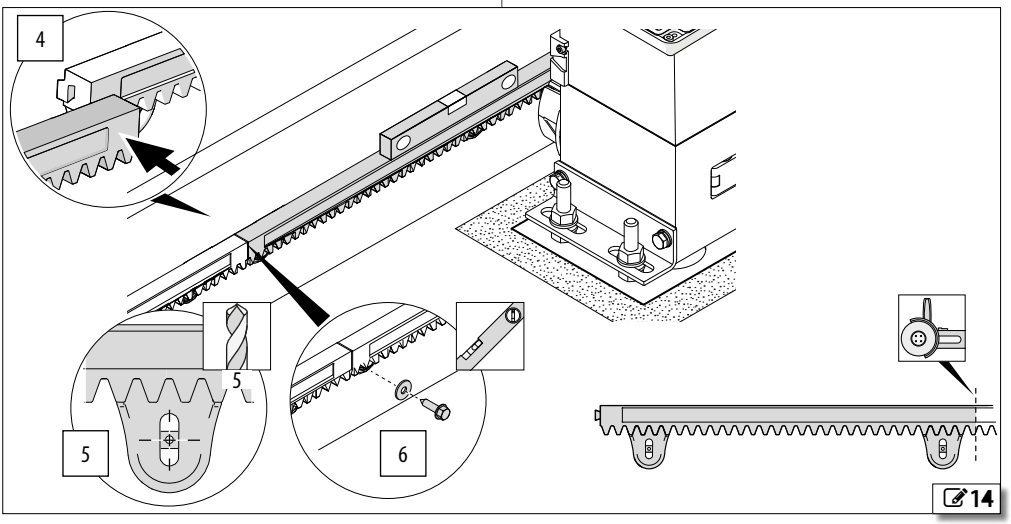

3.4 ADJUSTING AND FASTENING PERMANENTLY

In order for it to work correctly, the rack must never rest on the pinion.

1. Lower the gearmotor: turn the 4 support nuts clockwise by half a turn (a constant distance (**A**) between pinion and rack is constant for the entire length of travel.
2. Carry out the following checks (move the leaf manually to check the entire length of travel and all the elements of the rack).
   - Distance (**A**): with the gearmotor locked, it must be possible to rock the leaf manually to the left and right by a few millimetres.
   - Gearmotor levelling: use a spirit level.
   - Centring (**B**) of the rack and pinion.
3. Tighten the upper nuts to the fastening torques indicated in the figure.
4. Press the guards onto the brackets.

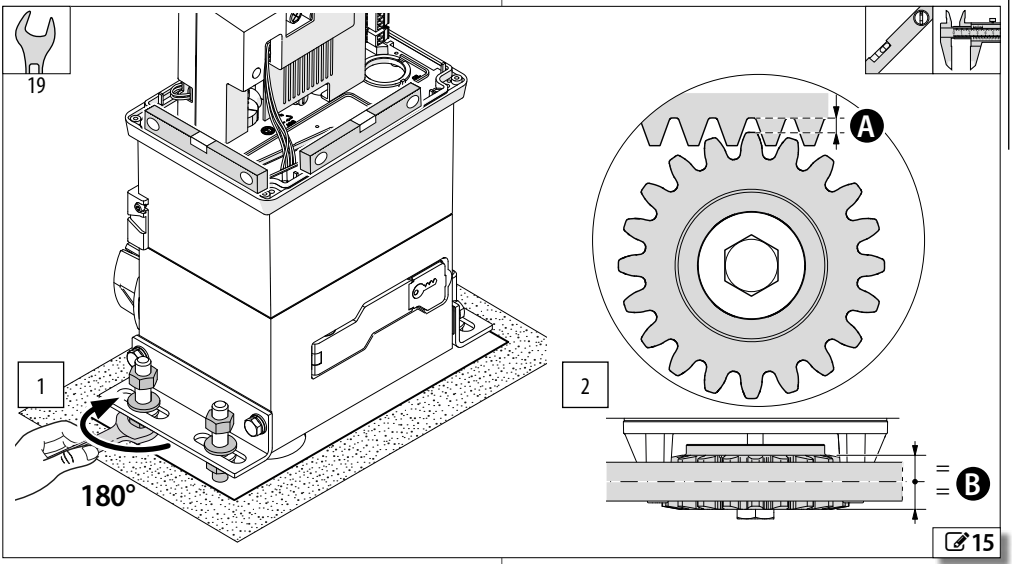

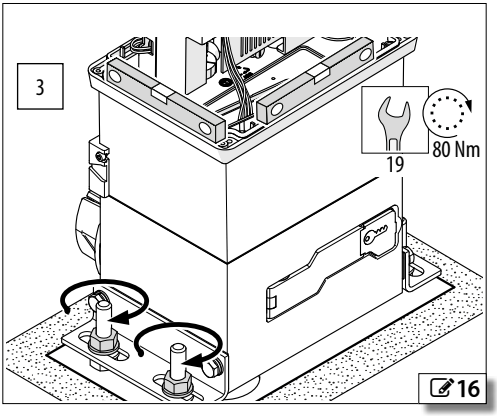

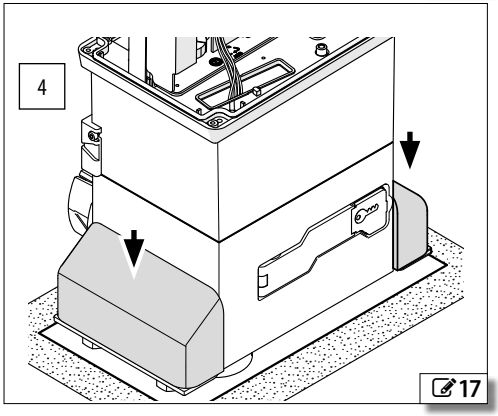

4. OPTIONAL EQUIPMENT

4.1 LOCK WITH PERSONALISED KEY

■ **Remove the existing lock**

1. Open the release lever using the key and then remove the screw and the locking lever.
2. Remove the nut and the existing lock.

■ **Install the new lock**

3. Install the new lock and fasten it using the nut.
4. Insert the locking lever vertically and fasten it using the screw.

Use the new key to make sure that the release lever works.

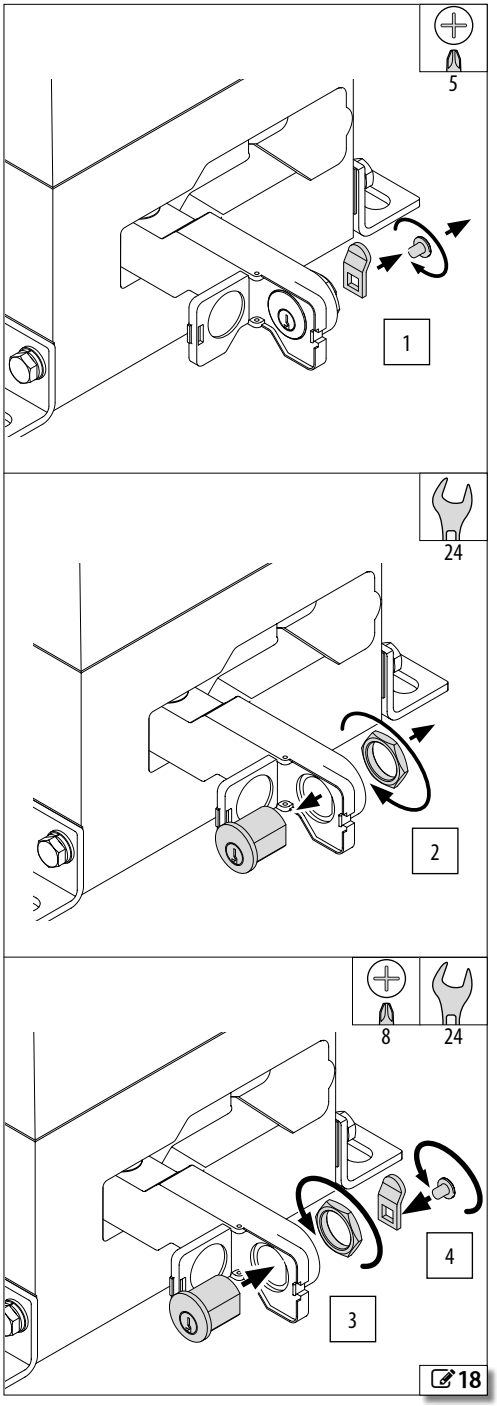

5. ELECTRONIC INSTALLATION

5.1 E781 BOARD COMPONENTS

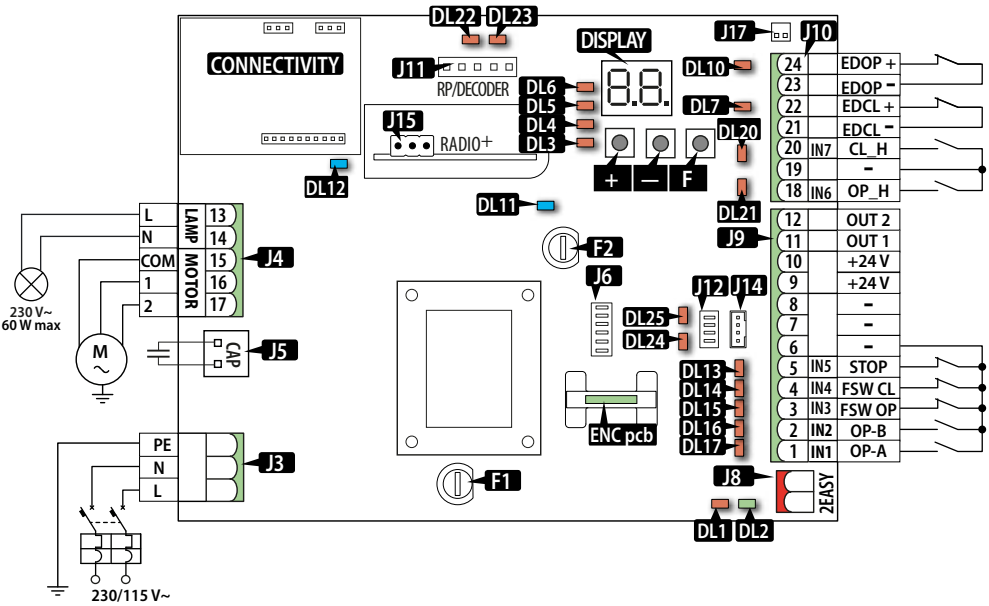

Key	
J3	Removable terminal board for the mains power supply
J4	Removable terminal board for motor and flashing light
J5	Connector for thrust capacitor
J6	Connector for encoder board
J8	Removable terminal board for Bus 2Easy devices
J9	Removable terminal board for control devices, programmable outputs and accessories power supply
J10	Removable terminal board for sensitive edges and forced commands
J11	Connector (5 pin) for FAAC radio/decoder boards
J12	Connector for inductive limit switch
J14	Connector for magnetic limit switch
J15	Connector (3 pin) for FAAC XF FDS or XF radio module
J17	Connector for LED lights on cover (NOT used)
DISPLAY	Programming display
+ – F	Programming buttons
F1	Fuse for mains power supply F 5A (230 V~) / F 10A (115 V~)
F2	Fuse for accessories power supply T 0.8A
CONNECTIVITY	Connectors for Simply Connect/XUSB
ENC pcb	Encoder reading board

LED (see section § Diagnostics)	
DL1	Bus 2Easy operation
DL2	Bus 2Easy line diagnostics
DL3	RADIO XF FDS or XF channel 1 (CH1)
DL4	RADIO XF FDS or XF channel 2 (CH2)
DL5	Errors/alarms
DL6	Encoder
DL7	Closing sensitive edges
DL10	Opening sensitive edges
DL11	Accessories power supply +24 V⎓
DL12	Power supply +5 V⎓
DL13	Stop command (STOP)
DL14	Closing photocells
DL15	Opening photocells
DL16	OPEN B
DL17	OPEN A
DL20	Forced closing command
DL21	Forced opening command
DL22	Radio activity RP channel 1 (CH1)
DL23	Radio activity RP channel 2 (CH2)
DL24 DL25	Opening/closing limit switch (depending on the direction of travel)

19

5.2 REMOVING THE COVER FROM THE BOARD

The board cover only has to be removed in order to work on electrical connections or to replace a fuse. Programming must be carried out with the board cover installed.

1. Remove the fastening screws (**A**).
2. Remove the cover (**B**).

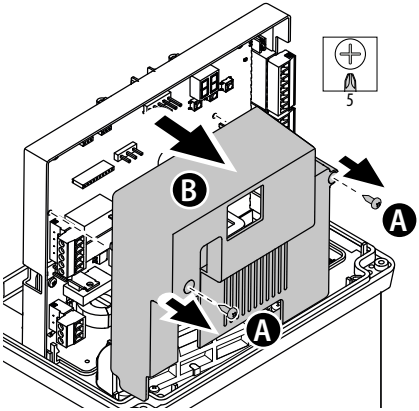

5.3 CONNECTIONS

When inserting connectors and pull out terminal-boards, be careful not to bend the printed circuit so as not to damage the board.

CONTROL DEVICES

Multiple NO contacts on same input must be connected in parallel.
Multiple NC contacts on same input must be connected in series.
Below is a brief explanation of the inputs. The effect a command has may vary according to the operating logic and programming functions.
For connecting devices to inputs with Failsafe enabled, refer to the Accessories Section.

■ **Connecting the devices to terminal board J9:**

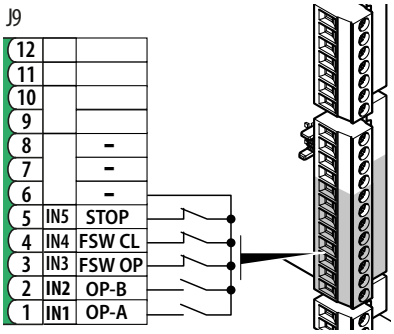

1 IN1 OPEN A Total motion command

NO contact. Connect a push-button or another type of pulse generator which, by closing a contact, commands the total opening of the gate.

2 IN2 OPEN B Motion command determined by the set operating logic

NO contact. Connect a push-button or another type of pulse generator which, by closing a contact, commands:
CLOSING (in logics C, b, bC)
PARTIAL OPENING (in all other logics)

3 IN3 FSW OP Photocells active during opening

NC contact. Connect a photocell or another device that, by opening the contact during opening, reverses the gate.

If the input is not used, bridge it to terminal –.

4 IN4 FSW CL Photocells active during closing

NC contact. Connect a photocell or another device that, by opening the contact during closing, reverses the gate.

If the input is not used, bridge it to terminal –.

5 IN5 STOP Stop command.

NC contact. Connect a push-button or another type of pulse generator which, by opening a contact, causes the automation to stop.

If the input is not used, bridge it to terminal –.

6
7 – Common contacts/ Accessories power supply negative
8

■ **Connecting the devices to terminal board J10:**

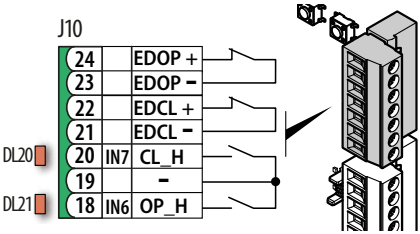

18 OP_H Forced opening command

NO contact. Connect a non self-latching control device.

The device has to be activated twice within 2.5 s. The gate moves as long as the second activation is maintained.

20 CL_H Forced closing command

NO contact. Connect a non self-latching control device.

The device has to be activated twice within 2.5 s. The gate moves as long as the second activation is maintained.

22 EDCL Sensitive edges active during closing

Connect a sensitive edge that, when activated during closing, causes the gate to reverse.

Configure the CE function input in basic programming, to connect:

- sensitive edges with NC contact (default)
- resistive sensitive edges 8.2 kΩ (supports a maximum of 4 resistive edges)

If the input is not used, it should be configured as NC and bridged to the – terminal.

24 EDOP Sensitive edges active during opening

Connect a sensitive edge that, when activated during opening, causes the gate to reverse.

Configure the OE function input in basic programming, to connect:

- sensitive edges with NC contact (default)
- resistive sensitive edges 8.2 kΩ (supports a maximum of 4 resistive edges)

If the input is not used, it should be configured as NC and bridged to the – terminal.

19 21 23 – Common contacts/ Accessories power supply negative

ACCESSORIES POWER SUPPLY

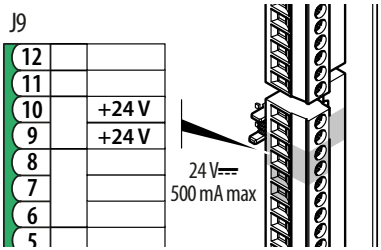

The E781 supplies 24 V" and is short-circuit protected with a maximum current of 500 mA.

The maximum current limit of 500 mA applies to the sum of all connected accessories, including BUS 2Easy. To calculate the maximum power consumption, refer to the instructions of the individual accessories.

6 7 8 – Common contacts/ Accessories power supply negative

9 10 +24V Accessories power supply positive

LIMIT SWITCHES

The magnetic limit switch connector is connected at the factory to the dedicated quick connector (**J14**).

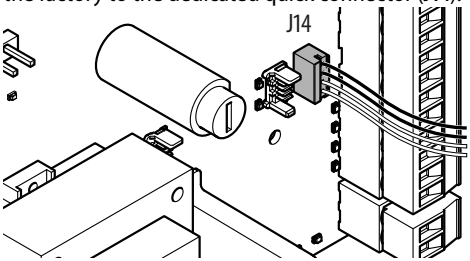

BUS 2EASY DEVICES

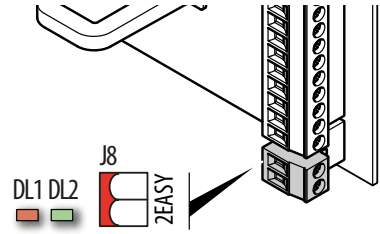

Do not exceed the maximum load of 500 mA.
If no Bus 2Easy devices are used, leave the terminals free.

For making the connection and assigning addresses, see the § BUS 2easy devices section.

PROGRAMMABLE OUTPUTS

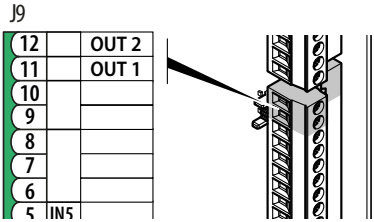

The E781 has two Open Collector outputs that are activated according to programming functions o1 and o2.

OUT active	OUT not active
0 V ⎓	open circuit

Do not exceed the maximum load for each output: 24 V⎓ with 100 mA.

FLASHING LIGHT

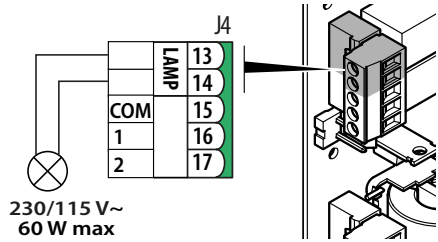

The flashing light indicates that the gate is moving and must be installed in a position that is visible from both sides of the gate.

The flashing light must be a 230 V~, max 60 W model.

Pre-flashing of 5 s before movement can be enabled via programming function PF.

XF FDS/XF RADIO MODULE

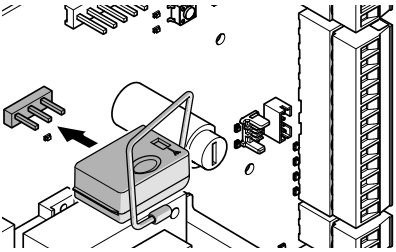

The 3-pin quick insertion connector is specifically for FAAC radio modules XF FDS/XF.

Insert as shown in the figure.

To memorize radio control codes see the section § Radio system.

RADIO RECEIVER/DECODER BOARD

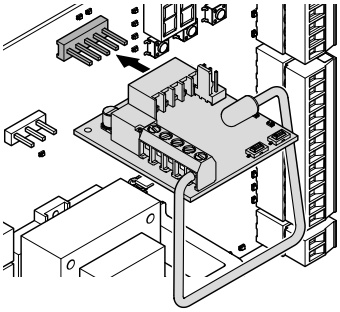

The 5-pin quick insertion connector is specifically for FAAC radio or decoder boards.

Insert as shown in the figure.

If a FAAC model RP receiver is used, it is recommended that you install the appropriate external antenna.

SIMPLY CONNECT/XUSB

Example: GSM Mobile module, Bluetooth Low Energy

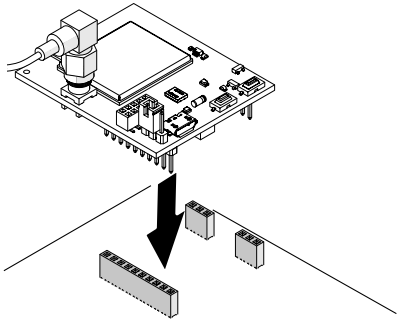

Insert the module into the dedicated plug connectors and install the "Simply Connect PRO" app.

When programming is taking place via Simply Connect, programming via the board is inhibited.

MOTOR

The motor is connected at the factory.

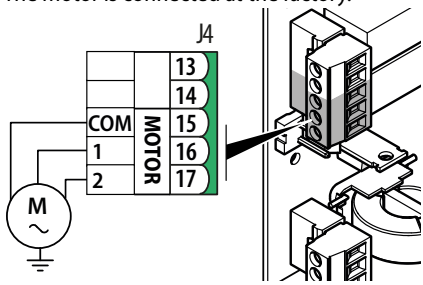

15	COM	Motor common contact (BLUE)
16	1	Phase 1 of the electric motor (BLACK)
17	2	Phase 2 of the electric motor (BROWN)

ENCODER

The encoder board is installed and connected at the factory (connection required for operation).

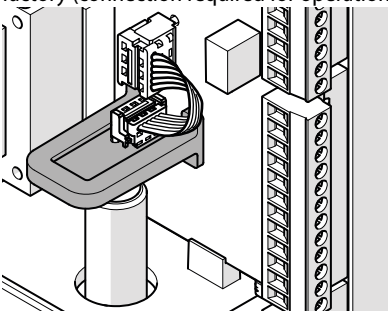

THRUST CAPACITOR

The capacitor is connected at the factory.

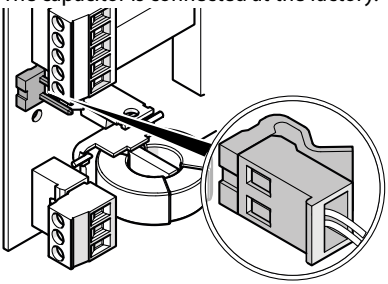

CONNECTING THE EARTH TO THE GEARMOTOR

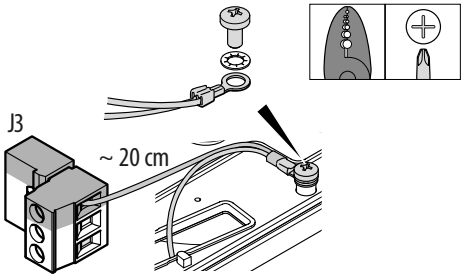

Crimp the system earthing conductor and a similar cable (3G minimum 1.5 mm²), approximately 20 cm long, onto the cable lug (provided with the hardware/accessories). Connect to terminal PE of terminal board J3. Fasten the cable lug to the earth connection of the gearmotor using the screw and washer provided with the hardware/accessories.

MAINS POWER SUPPLY

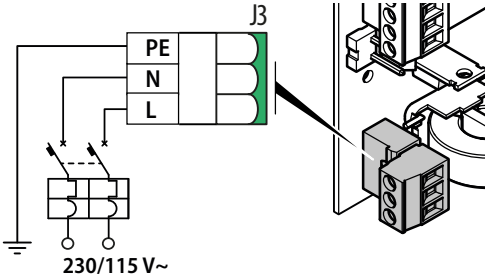

Use at least 3G 1.5 mm² wire.

PE	EARTH (connected previously)
N	NEUTRAL
L	PHASE

5.4 INSTALLING THE CABLE GLANDS

1. Arrange the individual electrical cables on the rubber strip of elements **A** and **B**. Join the elements and position them on the surface, each with the slot inserted in the pin.

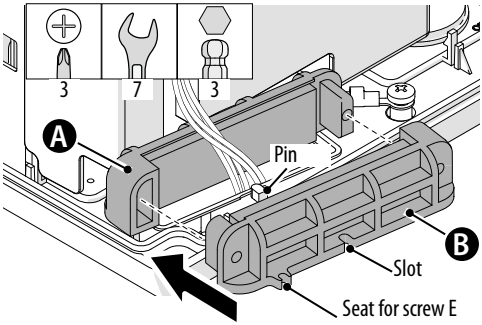

2. Tighten them together using the screws **C** and nuts **D** and then secure it to the surface using the screws **E**.

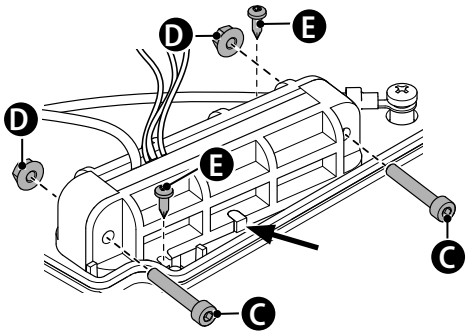

5.5 INSTALLING THE BOARD COVER

Once the connection has been made, install the cover, check that the cables are seated correctly and not in the way and secure with the screws.

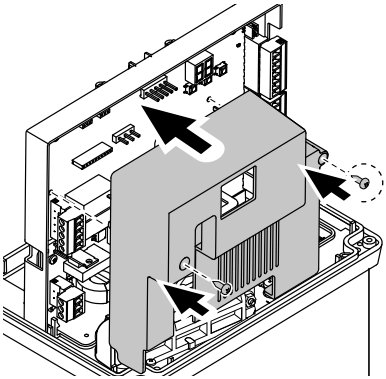

6. START-UP

Carry out the following operations referring to the § specific sections.

In the case of TWO-LEAF AUTOMATION, before starting, you have to power the Secondary board to set the parameter Ct=SE in basic programming (section § Two-leaf automation).

1. Turn the power supply on and check the status of the LEDs (section § Diagnostics).
2. Specify the direction of movement.
3. Install the limit switches on the rack.
4. Perform the setup.
5. Complete the programming.
6. Memorise the radio controls (if used) and put the automation into service.

6.1 TURNING ON THE POWER SUPPLY

Turn the power supply on.

LEDs DL11 and DL12light up. The display shows:

- 2 alternating dots for 10 s, then the FW version (e.g. 1.0) and then S0 flashing (setup required) or, if the setup has already been carried out, the automation status (e.g. 01).

6.2 SPECIFY THE DIRECTION OF MOVEMENT

1. Go to the d1 function in basic Programming and specify the direction of travel, looking at the gearmotor from the release device side:
   d1 = -3 open towards the right
   d1 = E- open towards the left
2. Then make sure that the direction of movement is correct using function (M1). Use buttons **+** and **-** in dead man mode:
   + to OPEN (the display shows oP)
   - to CLOSE (the display shows cL)

If the direction of movement is incorrect, reverse the phases of the motor (to be done with the power supply disconnected).

6.3 INSTALLING THE LIMIT SWITCHES

Refer to 20.

The two limit switches are marked with different symbols: SQUARE=closing, CIRCLE=opening.

1. Assemble the limit switches. Insert the spacer (**A**) (if necessary) as indicated according to the thickness of the rack.
2. Release the gearmotor and open the leaf manually in order to install the opening limit switch. Position the OPENING limit switch at the end of the rack as indicated, according to the opening direction of the leaf. Slide the limit switch along the rack in the opening direction until the corresponding LED on the board turns off. Slide the limit switch along the rack for another 4 cm.
3. Fasten using the 4 screws provided (**B**, then **C**).
4. Carry out the same procedure and install the CLOSING limit switch. Close the leaf manually and position the closing limit switch at the end of the rack as indicated in the figure, according to the opening direction of the leaf. Slide the limit switch along the rack in the closing direction until the corresponding LED on the board turns off. Slide the limit switch along the rack for another 4 cm. Fasten using the 4 screws provided (**B**, then **C**).

At the end of the procedure, restore gearmotor operation.

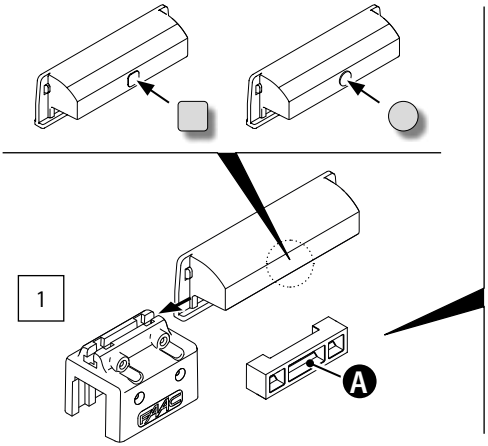

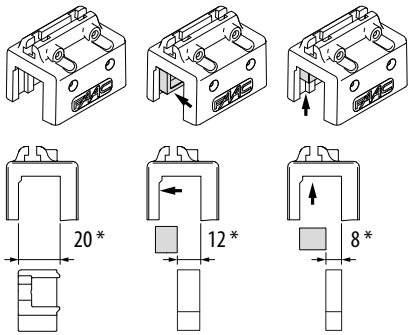

* Rack thickness

■ **Opening to the right (basic programming: dl = -3)**

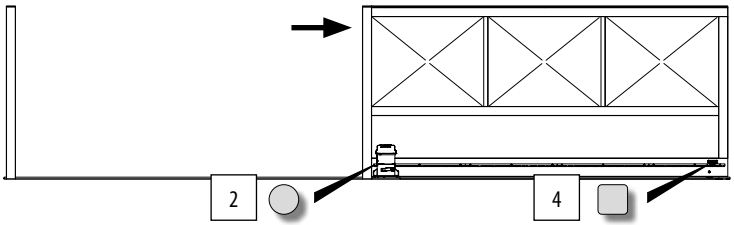

Opening limit switch (Led **FC1**)

Closing limit switch (Led **FC2**)

■ **Opening to the left (basic programming: dl = E-)**

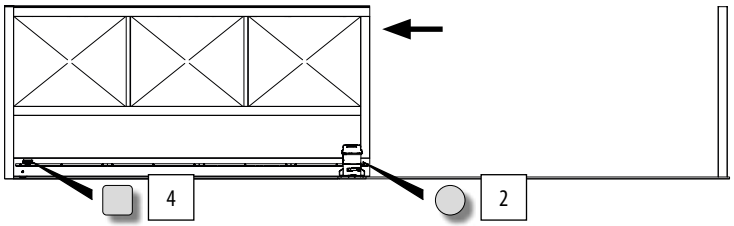

Closing limit switch (Led **FC1**)

Opening limit switch (Led **FC2**)

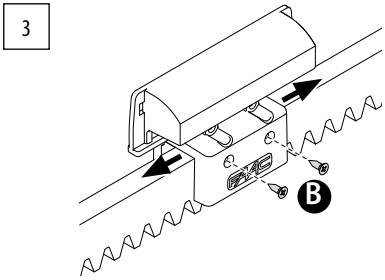

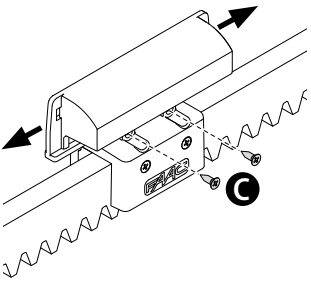

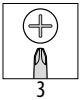

3

2.9 x 9.5 UNI 6955

20

PROGRAMMING MENU

When the display shows the automation status, you can enter basic or advanced Programming mode.

■ Basic programming

1. Press and hold down the **F** button.
   - The first function (JC) is shown on the display and is displayed as long as F remains pressed.
2. Release the button: the display shows the value of the function.
3. Press the **+** or **-** button to modify, then press the **F** button to confirm to go to the next function.

Proceed in the same way for all the functions (see ▦ Basic programming menu).

■ Advanced programming

1. Press and hold down the **F** button, then the **+** button as well:
   - The first function (bo) appears on the display, which is displayed as long as button F remains pressed.
2. Release the buttons: the display shows the value of the function.
3. Press the **+** or **-** button to modify, then press the **F** button to confirm to go to the next function.

Proceed in the same way for all the functions (see ▦ Advanced programming menu).

■ Exiting programming mode

ⓘ Every modified value becomes effective immediately, but when exiting from programming mode you have to decide whether to save the modifications or not.
Modifications are lost due to TIMEOUT if no buttons have been pressed for 10 minutes or if power to the board is disconnected before they have been saved.

1. Press and hold down the **F** button, then the **+** button as well.
   - Alternatively, scroll through the programming menu until you reach the last function (St).
2. Select:
   Y = save the changes
   no = DO NOT save the changes
3. Press button **F** to confirm: the display reverts to the automation status view.

▦ **1** Basic programming menu

BASIC FUNCTION		Default
JC	**Simply Connect** This code confirms that Simply Connect is available (default not modifiable).	1
dF	**DEFAULT CONFIGURATION** Y the programming corresponds to the DEFAULT settings no the programming does not correspond to the DEFAULT settings Select Y if you wish to reload the default values.	Y
Ct	**Two-leaf automation** Configure the board as Primary or Secondary. Pr = Primary SE = Secondary	Pr
LO	**OPERATING LOGICS**	EP

ⓘ The Secondary board does NOT display the settings reserved for the Primary board:
LO, PA, Pb, bu, tl, PF, Ph, oP, IP, ol, pl, tl, o2, p2, t2.

E Semi-automatic	C Dead man
EP Semi-automatic step-by-step	bC Mixed (b during opening, C during closing)
A Automatic	Ar Automatic with early closing
AP Automatic step-by-step	AI Automatic 1
S Automatic Safety	SP Automatic step-by-step safety
b Semi-automatic B	

PA	**PAUSE TIME** Displayed only if an automatic logic has been selected. 00…59 Adjustment step: 1 s 1.0…9.5 Adjustment step: 10 s	30
Pb	**PARTIAL PAUSE TIME** Displayed only if an automatic logic has been selected. It is carried out after partial opening. 00…59 Adjustment step: 1 s 1.0…9.5 Adjustment step: 10 s	30
FO	**MAXIMUM MOTOR FORCE** 01…50 (levels)	20
dI	**DIRECTION OF TRAVEL** Opening direction of the leaf, established by looking at the gearmotor from the release device side. -3 = opens towards the right E- = opens towards the left	-3
So	**OPENING SPEED** 01…10 (levels)	10
Sc	**CLOSING SPEED** 01…10 (levels)	10

BASIC FUNCTION	Default
ro **DECELERATION SPACE DURING OPENING** 00…30 (% of the stroke)	30
rc **DECELERATION SPACE DURING CLOSING** 00…30 (% of the stroke)	30
dS **DECELERATION SPEED** 01 = minimum speed 02 = maximum speed	02
OE **OPENING SENSITIVE EDGE** Configures the input dedicated to the sensitive edges that are active during opening. nc = 1 sensitive edge with NC contact* 1r = 1 resistive sensitive edge 8.2 kΩ 2r = 2 resistive sensitive edges 8.2 kΩ 3r = 3 resistive sensitive edges 8.2 kΩ 4r = 4 resistive sensitive edges 8.2 kΩ * Sensitive edges XT S 868 - XR S 868 allow you to enable the Failsafe (function 3F in advanced programming)	nc
CE **CLOSING SENSITIVE EDGE** Configures the input dedicated to the sensitive edges that are active during closing. nc = 1 sensitive edge with NC contact* 1r = 1 resistive sensitive edge 8.2 kΩ 2r = 2 resistive sensitive edges 8.2 kΩ 3r = 3 resistive sensitive edges 8.2 kΩ 4r = 4 resistive sensitive edges 8.2 kΩ * Sensitive edges XT S 868 - XR S 868 allow you to enable the Failsafe (function 3F in advanced programming)	nc
bu **Learn BUS 2easy devices** See the relative section.	no
MI **DEAD-MAN OPERATION** Use the following buttons to: + OPEN (displaying oP) - CLOSE (displaying cL)	MI
tL **SETUP** See the relative section.	tL
St **LEAVING THE PROGRAMMING MODE** Y exit saving the settings no exit without saving the settings After having confirmed using button **F**, the display indicates the STATUS of the automation:	Y

00 closed	05 opening
01 open	06 closing
02 stationary then opens	09 pre-flashing and then opens
03 stationary then closes	10 pre-flashing and then closes
04 in pause	50 (flashing) SETUP required

2 Advanced programming menu

ADVANCED FUNCTION	Default
bo **MAXIMUM TORQUE AT INITIAL THRUST** When it starts, the motor operates at maximum power for 1 s. Y = enabled, no = not enabled	Y
Sr **SLOW MOVEMENT EACH TIME POWER IS TURNED ON / RESTORED** Y = enabled, no = not enabled	Y
PF **PRE-FLASHING OF 5 S ON THE LAMP OUTPUT** no = not enabled oP = enabled before opening CL = enabled before closing OC = enabled before opening and closing	no
Ph **CLOSING PHOTOCELLS** Specifies the operation of the closing photocells. no = reopen immediately Y = reopen when the photocells are released	no
oP **OPENING PHOTOCELLS** Specifies the operation of the opening photocells. no = stop with reopening when the photocells are released Y = close again immediately	no
EC **ANTI-CRUSHING SENSITIVITY (ENCODER)** 00 = anti-crushing not enabled 01 = (minimum sensitivity) 02 =(medium sensitivity) 03 = (maximum sensitivity)	01
rA **LIMIT SWITCH OVERRUN** 00…08 in steps of 1 revolution of the motor.	00
IP **REVERSE ON OBSTACLE** (from encoder or sensitive edge) Y = Partial reverse, no = Total reverse	Y
PO **PARTIAL OPENING WIDTH** 10…50 (% of the stroke, in steps of 1 %)	30
IF **FAILSAFE ON PHOTOCELLS** 00 = not enabled 01 = enabled on FSW OP input 02 = enabled on FSW CL input 03 enabled on FSW OP and FSW CL input	00
2F **FAILSAFE ON STOP** 00 = not enabled 01 = enabled on STOP input	00

ADVANCED FUNCTION		Default
3F	**FAILSAFE ON SENSITIVE EDGES WITH NC CONTACT and TEST INPUT** 00 = not enabled 01 = enabled on EDOP input 02 = enabled on EDCL input 03 = enabled on EDOP and EDCL inputs	00
o1	OUT1 The output is activated according to the selected function; any timing is set in t1. 00 = Not enabled 01 = Failsafe 02 = Indicator light 03 = Courtesy Light (timed) 04 = Error in progress 05 = Status OPEN/ PAUSE 06 = Status CLOSED 07 = Status MOVING 09 = Status OPENING 10 = Status CLOSING 11 = Opening and closing electric lock 12 = Safety active 13 = TRAFFIC LIGHT function (active during OPENING and with automation OPEN) 14 = Timed output that can be activated by the second radio channel XF FDS or XF 15 = Timed output that can be activated by the second radio channel XF FDS or XF in step-by-step mode 33 = Programming in progress from Simply Connect	00
P1	**OUTPUT POLARITY** OUT1 Y = normally closed no = normally open **NOTE:** if the function of the output is Failsafe, the polarity must be = no	no
t1	**TIMING** OUT1 Displayed if o1 = 03 or 14. Sets the activation duration of output OUT1, if a timed function is programmed. 01… 99 Adjustment in steps of 1 minute.	02
o2	OUT2 The output is activated according to the function selected (see o1). Any timing is set in t2.	02
P2	**OUTPUT POLARITY** OUT2 Y = normally closed no = normally open **NOTE:** the Failsafe output requires polarity = no.	no
t2	**TIMING** OUT2 Displayed if o2 = 03 or 14. Sets the activation duration of output OUT2, if a timed function is programmed. 01… 99 Adjustment in steps of 1 minute.	02
AS	**MAINTENANCE REQUEST** Enables/disables the maintenance alert when the programmed number of cycles has been reached as specified in the following functions (nb, nc, nd). no = not enabled, Y = enabled	no

ADVANCED FUNCTION		Default
nb	**HUNDREDS OF THOUSANDS OF CYCLES** Displays the hundreds of thousands of cycles that have been performed. 00…99 (programmable if AS = Y)	00
nc	**THOUSANDS OF CYCLES** Displays the thousands of cycles that have been performed. 00…99 (programmable if AS = Y)	00
nd	**TENS OF CYCLES** Displays the tens of cycles that have been performed. 00…99 (programmable if AS = Y) To reset the cycle counters nb, nc, nd: press + and - for 5 s.	00
St	**LEAVING THE PROGRAMMING MODE** (see St in basic programming)	

ENGLISH

Translation of the original instructions

6.4 SETUP

The setup procedure consists of a series of movements during which the board acquires the stroke and other operating parameters. The setup procedure also registers the Bus 2Easy devices that are present.

Setup needs to be carried out:

- when S0 flashes on the display (e.g. when the automation is first put into operation or after the board has been replaced)
- if you wish to modify the stroke

Checks prior to setup:

- the automation must not be set to manual mode
- the STOP input must be closed (connected or bridged)
- In the case of a two-leaf automation, the Secondary board has to be configured before carrying out the setup, then the setup procedure will take place simultaneously on both leaves.

Perform the setup:

1. Go to the A1 function in Basic programming. Press the **+** or **-** button to move the leaf so that it is about 50 cm from the closing limit switch.
2. Press the button **F** to go to the next function tL.
3. Press the **+** and **-** buttons at the same time for at least 3 s. Release the buttons when tL starts to flash.
4. The setup procedure starts and is carried out automatically. The display indicates each phase in progress with a flashing code:

S1	The gate closes slowly as far as the CLOSING limit switch
S2	the gate remains stationary for 5 s against the closing limit switch
S3	the gate opens slowly as far as the OPENING limit switch
O1 or O4	(automation status, according to the operating logic) the setup is finished

It is only possible to interrupt the setup procedure by using the STOP.

If the setup doesn't start or is not completed, S0 will flash again on the display. Before repeating the setup procedure, resolve any ERRORS there may be (section § Diagnostics).

6.5 CONFIGURING MOVEMENTS AND TIMING

■ **In BASIC Programming**

- Ct **Two-leaf automation** For this type of installation, one board must be configured as the Primary and the other as the Secondary.

- PA **OPEN A pause time**, Pb **OPEN B pause time** In operating logics with automatic closing, the gate remains open for the pause time set for total or partial opening.

■ **In ADVANCED programming**

- bo **Maximum force at initial thrust** If there is particularly high friction, this allows the maximum force of the motor to be used when it starts, ignoring the maximum force limits set in basic programming (F0).

- Ph **Pre-flashing (5 s)** Allows you to enable pre-flashing before each movement.

- rA **Limit switch overrun** Allows you to continue at a slower speed, after reaching the limit switch (if necessary to complete the opening/closing).

- P0 **Partial opening width** Regulates the opening stroke from the OPEN B command (active in automatic logics).

6.6 CONFIGURING THE ANTI-CRUSHING SYSTEM

Anti-crushing protection is obtained by limiting the static/dynamic force exerted by the leaf in the event of impact with an obstacle. When an obstacle is detected, by the encoder or sensitive edges, the board also issues a reverse command.

The functions used for adjusting the anti-crushing system are listed below. Some allow the static/dynamic force of the leaf on the obstacle to be limited; others configure the reverse on obstacle. Adjust the functions together, taking into consideration the configuration of the automation and the conditions of use. For example, if there is friction and the sensitivity of the anti-crushing system is too high, it can cause frequent unwanted reversals.

■ **In BASIC Programming**

- FO **Maximum motor force** Set a low value if you want to limit the static force in the event of impact.

- So **Opening speed**, Sc **Closing speed** Set a low value if you want to limit the dynamic force of the leaf on the obstacle in the event of impact.

- ro **Deceleration during opening**, rc **Deceleration during closing** Specifies the extent of the leaf slowdown near the open / closed positions.

- dS **Deceleration speed** The slowdown allows you to limit the inertial forces and reduce the vibration of the gate when it is stopping. Set a low value if you want to limit the dynamic force of the leaf during slowdown.

■ **In ADVANCED programming**

- Sr **Slow movement when automation restored** When power comes back on after a power failure, if the closing limit switch is not engaged, the movement following a command takes place at a slow speed. The programmed speed is restored only after the gate engages the closing limit switch.

- EC **Anti-crushing sensitivity** Specifies the speed at which the anti-crushing system triggers after an obstacle has been detected by the encoder.

- IP **Reverse on obstacle** Specifies whether the reverse movement when an obstacle is detected should be complete or partial.

The consecutive obstacles count is only enabled in the case of total reversal (IP=no).

7. PUTTING INTO SERVICE

7.1 FINAL OPERATIONS

1. Carry out a complete functional test of the automation and all the installed devices.
2. Make sure that the forces generated by the leaf are within the limits permitted by the current regulations. Use an impact force tester in accordance with standard EN 12453. For non-EU countries, if there are no specific local regulations, the static force must be less than 150 N. If necessary, adjust the anti-crushing system and make any other adjustments that may be necessary.
3. Make sure that the maximum force required to move the leaf manually is less than 225 N in residential areas and 260 N in industrial or commercial areas.
4. Highlight all areas with adequate warning signs in which there are still residual risks, even if all possible safety measures having been adopted.
5. Place a "DANGER, AUTOMATIC MOVEMENT" sign (not supplied) in a prominent position on the gate.
6. Attach the CE marking to the gate.
7. Fill out the EC declaration of conformity and the system register.
8. Give the EC Declaration, the system register with the maintenance plan and the instructions for use of the automation to the system owner/operator.

INSTALLING THE COVER

Install the cover once the gearmotor has been start-up.

Apply the adhesive sign to the cover: risk of fingers and hands being trapped due to the rotation of the pinion and the movement of the rack.

1. Install and fasten the cover.
2. Press the screw caps on.

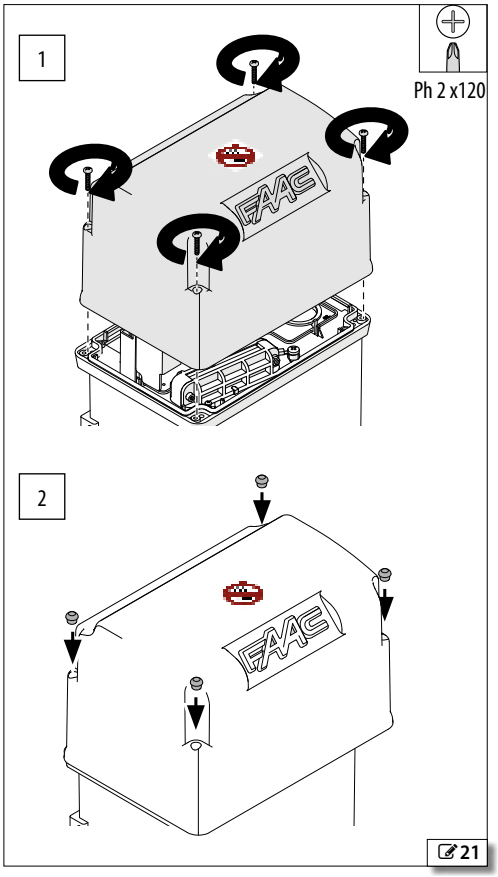

8. ACCESSORIES

8.1 RELAY PHOTOCELLS

Use photocells with a NC relay contact. If multiple photocells are used, the contacts must be connected in series. If the photocell inputs are not used, they must be bridged to (-).

Position and connect the photocells according to their required use.

FSW CL	Photocell active during closing
FSW OP	Photocell active during opening

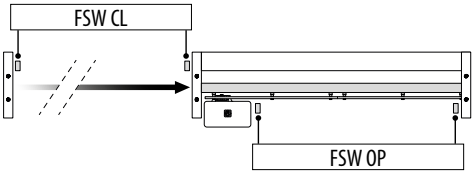

Program their operation in advanced programming (Ph, oP).

The action carried out when the photocells are triggered depends on the operating logic of the automation.

FAILSAFE

Failsafe is a functional test that is carried out before a movement: the board momentarily disconnects power to the transmitters and checks the change in status of the input. If the test fails, the board generates an error and prevents the automation from moving.

To enable the Failsafe test:

- connect the negative of the photocell transmitters to an output (OUT1/OUT2) configured as Failsafe (o1 or o2=01) instead of to the (-)
- configure the Failsafe (IF)

The maximum power consumption of the output configured as Failsafe is 100 mA.

1 pair of closing or opening photocells

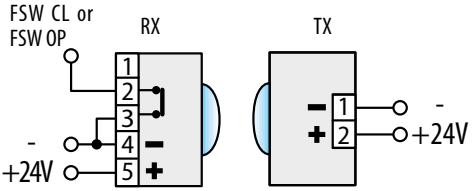

22

2 pairs of closing or opening photocells

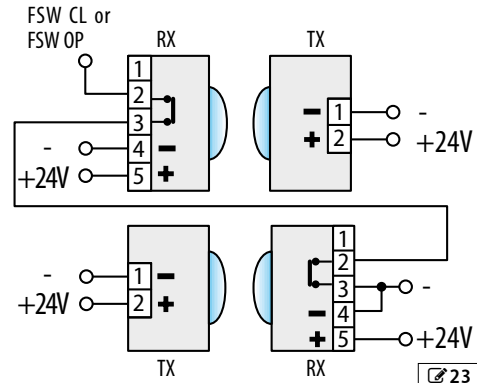

23

8.2 SENSITIVE EDGES

The board has two inputs for connecting sensitive edges that are active during opening (EDOP) or during closing (EDCL).

The following types of sensitive edges can be connected:

- resistive 8.2 kΩ (up to 4 edges connected in parallel)
- with NC contact
- with NC contact and **TEST** input

Carry out the connections and programming indicated in the table according to the type of device used.

Specify the type of reverse mode in advanced programming:

- IP =no complete reverse
- IP =Y partial reverse

FAILSAFE

Failsafe is a functional test that is carried out before a movement. If the test fails, the board generates an error and prevents the automation from moving.

If the device used has a **TEST** input, connect it to the output (OUT1 or OUT2) configured as Failsafe (o1 or o2 = 01).

	INPUTS	BASIC PROGRAMMING	ADVANCED PROGRAMMING
Resistive edge 8.2 kΩ			
active during opening	24 EDOP + 23 EDOP –	OE 1r 1 edge 2r 2 edges 3r 3 edges 4r 4 edges	3F = 00
active during closing	22 EDCL + 21 EDCL –	CE	
Edge with NC contact			
active during opening	24 EDOP + 23 EDOP –	OE= nc	3F = 00
active during closing	22 EDCL + 21 EDCL –	CE= nc	
Edge with NC contact and TEST input			
active during opening	24 EDOP + 23 EDOP – 11 OUT1 / 12 OUT2	OE= nc	3F = 01 Failsafe test on EDOP input 3F = 02 Failsafe test on EDCL input 3F = 03 Failsafe on inputs EDOP and EDCL o1/o2 = 01 (**Failsafe**)
active during closing	22 EDCL + 21 EDCL – 11 OUT1 / 12 OUT2	CE= nc	

8.3 STOP / SAFETY STOP

The command stops the automation.

Make the connections and programming indicated in the table for functional STOP or safety STOP (e.g. on the pedestrian door integrated in the sliding leaf).

FAILSAFE

failsafe is a functional test that is carried out when the contact is opened. If the test fails, the board generates an error and prevents the automation from moving.

	INPUTS	ADVANCED PROGRAMMING
STOP device with NC contact		
active in all states	5 STOP 6/7/8 (–)	2F = 00
Safety STOP device with NC contact		
active in all states	5 STOP 11 OUT1 / 12 OUT2	2F = 01 Failsafe test on STOP input o1 / o2 = 01 (Failsafe)

8.4 BUS 2EASY DEVICES

It is possible to connect FAAC Bus 2Easy devices (photocells, sensitive edges, control devices) to the board.

If no BUS 2easy accessories are used, leave connector 2EASY free (do not bridge).

CONNECTION

Connect the devices to the 2EASY terminal board.

Do not exceed the maximum load of 500 mA.
The overall length of the Bus 2Easy cables must not exceed 100 m.
The connection on the BUS line does not require a matching polarity connection.

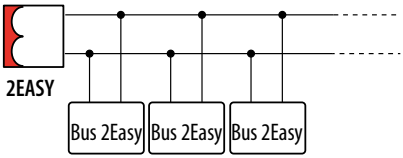

BUS 2EASY PHOTOCELLS

Photocells are additional type D detection devices (according to EN 12453) that reduce the likelihood of contact with the moving leaf. The photocells are not safety devices according to standard EN 12978. Detection devices used as safety accessories (e.g. sensitive edges) to protect against a hazard, must comply with standard EN 12978.

Type of use:

FSW CL	Photocell active during closing
FSW OP	Photocell active during opening
FSW OP/CL	Photocell always active
OPEN	Photocell for OPEN A

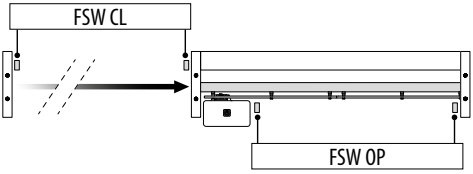

The action carried out when the photocells are triggered depends on the operating logic of the automation.

1. Assign an address to the BUS 2easy photocells by setting the four DIP switches on both the transmitter and the corresponding receiver (▦ see table).

The transmitter and receiver of a pair of photocells must have the same DIP switch settings.

There must never be more than one pair of photocells with the same DIP switch setting. If there is more than one pair of photocells with the same DIP switch setting, it generates a conflict error on the board and prevents the automation from working. Detection devices do not generate conflicts with control devices and vice versa.

2. Register the BUS 2easy devices (§ specific section).
3. Check the Bus 2Easy devices (§ specific section) and make sure that the automation operates according to the type of photocell installed.

▦ **3** Assigning an address to Bus 2Easy photocells

Key: 0=OFF , 1=ON

1 0 0 0	FSW CL
1 0 0 1	
1 0 1 0	
1 0 1 1	
1 1 0 0	
1 1 1 0	
0 0 0 0	FSW OP
0 0 0 1	
0 0 1 0	
0 0 1 1	
0 1 1 1	
0 1 0 0	FSW OP/CL
0 1 0 1	
1 1 1 1	OPEN

ON
– – – –
1 2 3 4

BUS 2EASY SENSITIVE EDGES

Type of use:

CL EDGE	Sensitive edge active during closing
OP EDGE	Sensitive edge active during opening

The activation of a sensitive edge causes the direction of movement to reverse as specified in advanced programming:

- complete IP = no
- partial (2 s) IP = y

1. Assign an address to the device electronics by setting the four DIP switches (▦ see table).

No two devices should have the same DIP switch settings. If there are multiple devices with the same DIP switch setting, it generates a conflict error on the board and prevents the automation from working. Detection devices do not generate conflicts with control devices and vice versa.

2. Register the BUS 2easy devices (§ specific section).
3. Check the Bus 2Easy devices (§ specific section) and make sure that the sensitive edges are working correctly. When the gate is moving, use an obstacle to activate the sensitive edge and make sure that the automation operates according to the type of sensitive edge installed.

4 Addressing Bus 2Easy sensitive edges

Key: 0=OFF , 1=ON

1 1 0 1	CL EDGE
0 1 1 0	OP EDGE

ON
– – – –
1 2 3 4

BUS 2EASY CONTROL DEVICES

1. Configure the DIP switches on the device to assign 1 o 2 commands (see table).

Stop NC also generates a stop when the device is disconnected. A command (e.g.: OPEN A_1) must be used on only one of the connected devices.
No two devices should have the same address.
If there is more than one device with the same address, it generates a conflict error on the board and prevents the automation from working. Detection devices do not generate conflicts with control devices and vice versa.

2. Register the BUS 2easydevices (§ specific section).
3. Check the Bus 2Easy devices (§ specific section) and make sure that the automation operates according to the type of control devices installed.

5 Addressing Bus 2Easy control devices

Key: 0=OFF , 1=ON

DIP switch 5, in the ON position enables the device for 2 commands.

ON
– – – – ■
1 2 3 4 5

0 0 0 0 0	Open A_1
0 0 0 1 0	Open A_2
0 0 1 0 0	Open A_3
0 0 1 1 0	Open A_4
0 1 0 0 0	Open A_5
0 1 0 1 0	Stop
0 1 1 0 0	*Stop NC_1
0 1 1 1 0	*Stop NC_2
1 0 0 0 0	Close
1 0 0 1 0	Open B_1
1 0 1 0 0	Open B_2
1 0 1 1 0	Open B_3
1 1 0 0 0	Open B_4
1 1 0 1 0	Open B_5
1 1 1 0 0	/
1 1 1 1 0	/

ON
– – – – ■
1 2 3 4 5

0 0 0 0 1	Open A_1	Open B_1
0 0 0 1 1	Open A_1	Open B_2
0 0 1 0 1	Open A_1	Stop
0 0 1 1 1	Open A_1	Close
0 1 0 0 1	Open A_2	Open B_1
0 1 0 1 1	Open A_2	Open B_2
0 1 1 0 1	Open A_2	Stop
0 1 1 1 1	Open A_2	Close
1 0 0 0 1	Open A_3	Open B_3
1 0 0 1 1	Open A_3	Open B_4
1 0 1 0 1	Open A_3	Stop NC_1
1 0 1 1 1	Open A_3	Close
1 1 0 0 1	Open A_4	Open B_3
1 1 0 1 1	Open A_4	Open B_4
1 1 1 0 1	Open A_4	*Stop NC_2
1 1 1 1 1	Open A_4	Close

E.g.: In order to have OPEN A on different connected devices, set OPEN A_1 on the first and OPEN A_2 or OPEN A_3 on the second...

*Stop NC also generates a stop when the device is disconnected. If you do not require this function, use one “Stop".

REGISTERING BUS 2EASY DEVICES

Registration is required:

- when the automation system is first started or after the board has been replaced
- following any changes (addition, replacement or removal) to the BUS 2easy devices

Registration procedure BUS 2easy:

1. With the board powered, go to the bu function in basic programming.
2. Press the **+** and **-** buttons simultaneously for at least 5 s. The display flashes, then y appears (registration complete).
3. Release the buttons and exit from programming mode.

CHECKING THE BUS 2EASY STATUS LEDS

To verify the Bus 2Easy connection and status, check the LEDs on the board:

DL1 (RED)	● At least one device is in operation
	○ NO devices in operation
	✱ Bus 2Easy registration in progress
DL2 (GREEN)	● OK
	○ SLEEPING
	✱ SHORT CIRCUIT
	✱ ERROR

VERIFYING BUS 2EASY DEVICES

1. Go to the bu function in basic programming. The display shows status Bus 2Easy:

no	No devices are registered
–	At least one device registered
cc	Bus 2Easy short circuit / overload (error 36)
Er	Bus 2Easy line error (check the addresses and repeat the registration)

2. Press the **+** button and keep it pressed; the segments relative to the registered devices light up (**24**). Release the button, the display reverts to the Bus 2Easy status view.
3. To check the operation of the registered devices, activate each device individually and check that the corresponding segment lights up.

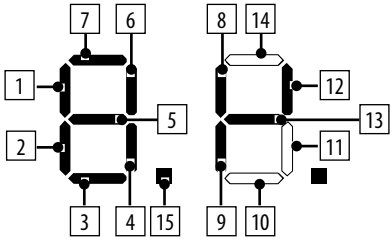

1	Control device Open A
2	Control device Open B
3	Closing photocells
4	Photocells for Open impulse
5	Opening/closing photocells
6	Control device Close
7	Opening photocells
8	Control device Stop
9	Closing sensitive edge
10, 11	Not used
12	Opening sensitive edge
13	Bus 2Easy status
14	Not used
15	Communication between Primary/Secondary boards

e.g. 1 or more OPEN A control devices and closing photocells are registered:

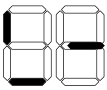

24

8.5 INDICATOR LIGHT/COURTESY LIGHT, TRAFFIC LIGHT CONTROL, ELECTRIC LOCK

Do not exceed the maximum load of the output (24 V ⎓, 100 mA). If necessary, use a relay and a power supply that is external to the board.

1. Connect the device to programmable output OUT1 or OUT2.
2. In advanced programming, program the output:
   - function of output: o1 (OUT1), o2 (OUT2)
   - output contact type (NO/NC): P1 (OUT1), P2 (OUT2)
   - activation time (only for timed functions): t1 (OUT1), t2 (OUT2)

■ **Indicator light**

o1/o2 = 02

The indicator light remotely indicates the status of the automation:

indicator light	automation
off	closed
on	opening/open/paused
flashing	closing

■ **Courtesy light (timed)**

o1/o2 = 03

The courtesy light turns on for the duration of the movement and remains on for the time set in t1/t2.

■ **Electric lock**

o1/o2 = 11

The electric lock is activated just before opening and closing.

■ **Traffic light control**

o1/o2 = 13

The traffic light control is on when the automation is opening and flashes during closing (with pre-flashing for 3 s before starting to close).

8.6 RADIO SYSTEM

The E781 is fitted with an integrated two-channel decoding system that requires either a XF FDS or XF radio module to be installed, to allow various types of FAAC radio controls to be memorised.

■ **Radio module XF FDS**

The **XF FDS** radio module allows you to memorise FAAC radio controls with FDS coding. A maximum of 251 codes can be memorised. FDS technology is characterized by dual frequency transmission (433 and 868 MHz). XF FDS is not compatible with SLH, SLH LR, LC/RC, DS radio controls.

■ **Radio module XF433 or XF868**

The **XF433** or **XF868** radio module allows you to memorise FAAC radio controls that use the following types of radio code: SLH, SLH LR, LC/RC, DS. It is also possible to use FDS radio controls by following a specific procedure to convert them into SLH mode (see instructions). A maximum of 256 codes can be memorised. The various types of radio codes can coexist, but the radio module and all the radio controls must have the same frequency.

The commands available are:
- OPEN A on radio channel 1 (CH1)
- OPEN B/CLOSE on radio channel 2 (CH2)
- Alternatively, the second radio channel can be enabled to activate a programmable output (§ Advanced programming)

When it is switched on, the board detects the module and activates the corresponding radio mode.

If the board detects a radio module that is not compatible with any of the radio controls that have already been memorised, the 2 RADIO LEDs flash alternately to indicate the error. It is possible to delete the radio controls, or install a compatible radio module.

To check which radio mode is active on the board, press the + and - buttons at the same time.
The display shows the corresponding code (after any Errors / Alarms that may be present):
SL compatible with SLH, SLH LR, LC/RC, DS radio controls
Fd compatible with FDS radio controls

■ **Memory full warning**

If the RADIO LED on the board turns off instead of flashing for 20 s during the radio control memorisation procedure, it means that the radio memory is already full and it is not possible to continue.

INSTALLING THE XF FDS OR XF RADIO MODULE

1. The module should only be inserted into the connector with the board turned off and as indicated in the figure.

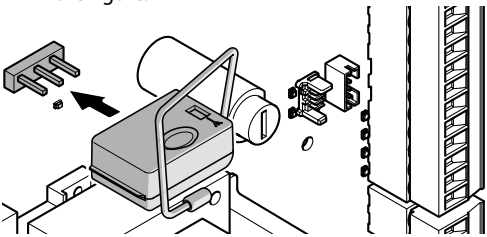

2. Only switch on power supply after having installed the module. Then memorise the radio controls.

Follow the instructions to memorise the radio controls according to their type.
Carry out the procedure with the radio control approximately 1 m away from the board.

MEMORISING XF FDS RADIO CONTROLS

1. On the board, press the **+** (memorise OPEN A) or **-** (memorise OPEN B/CLOSE) button and release it when the corresponding RADIO LED (RADIO1 or RADIO2) starts to flash for 20 s (time available for the next step).
2. Press and release the button on the radio control that you wish to memorise for the radio channel. To confirm the memorisation, the RADIO LED lights up steadily for 2 s and then starts to flash again for another 20 s (time available to repeat step 2 on another radio control).

The procedure ends after 20 s if no further radio controls are memorised and the RADIO LED switches off. To add additional radio controls, repeat the procedure from step 1.

MEMORISING SLH/SLH LR RADIO CONTROLS

Memorise the first Master radio control on the board. Afterwards, it is not necessary to access the board in order to add radio controls.

To check if the radio control is a Master device, press and hold a button and watch the LED:
- flashes briefly, then the light becomes steady = Master
- turns on immediately with a steady light = NON Master

Whenever a new Master is memorised on the board, any SLH/SLH LR radio controls that are already in use are disabled.

■ Memorising the first radio control (Master)

1. On the board, press the **+** (memorise OPEN A) or **-** (memorise OPEN B/CLOSE) button and release it when the corresponding RADIO LED (RADIO1 or RADIO2) starts to flash for 20 s (time available for the next steps).
2. Press buttons **P1** and **P2** simultaneously on the radio control and release them when LED on the radio control starts to flash for 8 s (time available for the next step).
3. Press and release the button on the radio control to be memorised. The corresponding RADIO LED on the board becomes steady for 1 s and then switches off (memorisation complete).
4. Release the button.

When using the memorised button for the first time, press it twice in succession to obtain the command.

■ Adding SLH/SLH LR radio controls

1. Press buttons **P1** and **P2** simultaneously on the already memorised Master radio control and release them when its LED on the radio control starts to flash for 8 s (time available for the next step).
2. Within 8 s, press and hold the button that has already been memorised, the LED lights up with a steady light.
3. Bring the radio control that has already been memorised, into contact face to face with the new one to be memorised.
4. Press and release the button on the new radio control to be memorised. The LED of the radio control flashes twice and then switches off (memorisation complete).
5. Release the buttons.

When using the memorised button for the first time, press it twice in succession to obtain the command.

MEMORISING LC/RC RADIO CONTROLS

1. On the board, press the **+** (memorise OPEN A) or **-** (memorise OPEN B/CLOSE) button and release it when the corresponding RADIO LED (RADIO1 or RADIO2) starts to flash for 20 s (time available for the next steps).
2. Press and release the button on the radio control to be memorised. The corresponding RADIO LED on the board becomes steady for 2 s (memorisation completed), then starts to flash again. Another radio control can be memorised within 20 s.

The procedure ends after 20 s if no further radio controls are memorised and the RADIO LED switches off. To add additional radio controls, repeat the procedure from step 1.

■ Adding LC/RC radio controls

Use a LC/RC radio control that is already use by the automation, without having to use the board.

1. Take a radio control that is already in use and move close to the board.
2. Press buttons **P1** and **P2** simultaneously on the radio control that is already in use and release them when the LED on the radio control starts to flash slowly for 5 s (time available for the next step).
3. Press and release the button that has already been memorised (the corresponding RADIO LED on the board starts to flash for 20 s, the time available for the next step).
4. Press the button to be memorised on the new radio control (the corresponding RADIO LED on the board becomes steady for 2 s to confirm the memorisation. It then starts to flash again and another radio control can be memorised within 20 s).

The procedure ends after 20 s if no further radio controls are memorised and the RADIO LED switches off. To add additional radio controls, repeat the procedure from step 1.

MEMORISING DS RADIO CONTROLS

1. Set the required combination of the DIP switches on the radio control (avoid setting them to all ON or all OFF).
2. On the board, press the **+** (memorise OPEN A) or **-** (memorise OPEN B/CLOSE) button and release it when the corresponding RADIO LED (RADIO1 or RADIO2) starts to flash for 20 s (time available for the next step).

If the RADIO LED at step 2 turns off instead of flashing for 20 s, it means that the radio memory is already full and it is not possible to continue.

3. Press and release the button on the radio control to be memorised. **The** corresponding RADIO LED on the board becomes steady for 1 s and then switches off (memorisation complete).
4. To memorise other radio controls, it is possible to set a DIP switch combination that has already been memorised or repeat the procedure for new combinations.

8.7 DELETING RADIO CONTROLS

This procedure cannot be reversed. It will delete ALL radio control codes that have been memorised as OPEN A and OPEN B/CLOSE. The deletion procedure is only active when the display shows the automation status.

1. Press the **-** or **+** button and do not release it until the LED sequence has finished:
   - after 1 s the RADIO2 LED starts flashing slowly
   - after 5 s, the RADIO1 and RADIO2 LEDs both start to flash quickly (deletion in progress)
   - after 7 s both the LEDs come on steadily (deletion complete)
2. Release the button, both LEDs switch off.

9. TWO-LEAF AUTOMATION

It possible to install two gearmotors to move two opposite opening doors.

One of the control boards is specified as the Primary and the other as the Secondary. When in operation, the Primary board also drives the Secondary board. The anti-crushing system is active on each automation and reverses both leaves.

The installer decides which will be the Primary board and which will be the Secondary board, taking into account that:

- the control devices, with the exception of the sensitive edges, have to be connected exclusively to the Primary board
- the flashing light and Bus 2Easy devices can be connected to the Primary or to the Secondary board.

1. Install one gearmotor for each leaf.
2. Connect the control devices and accessories.
3. Before connecting the boards together, turn on power to the Secondary board and configure it in Basic Programming (Ct=SE), then switch off the power.
4. Connect the 2 boards together on the Bus 2Easy line. Respect the polarity shown in the figure.
5. Turn on power to both boards.
6. Use the Primary board to launch the setup procedure: it is carried out simultaneously on both automations and registers Bus 2Easy the on the primary.

Alternatively, the setup can be carried out independently on each automation, before connecting the boards together. Subsequently, the BUS has to be registered on the primary.

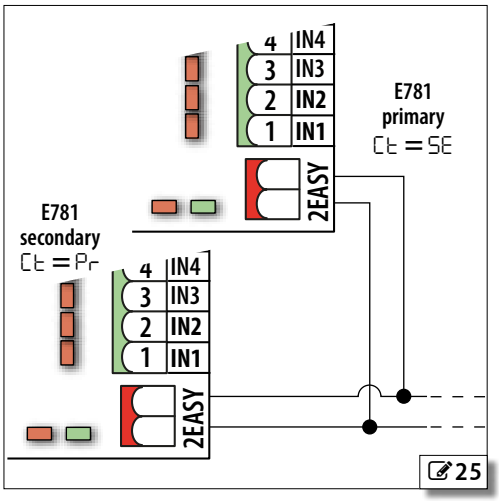

Programming NOT available on the Secondary:	
LO	Logics
PA	Pause time A
Pb	Pause time B
bu	Bus 2Easy registration
tI	Setup
PF	Pre-flashing
Ph	Closing photocells
oP	Opening photocells
IP	Reverse on obstacle
o1, p1, t1 o2, p2, t2	Outputs OUT1, OUT2

Bus 2Easy status led on the Secondary board	
DL1 (RED)	● At least one device is in operation
	○ No devices in operation
	✱ Primary / Secondary board connection interrupted
DL2 (GREEN)	○ Always off

10. DIAGNOSTICS

SIGNALLING LEDS ON THE BOARD

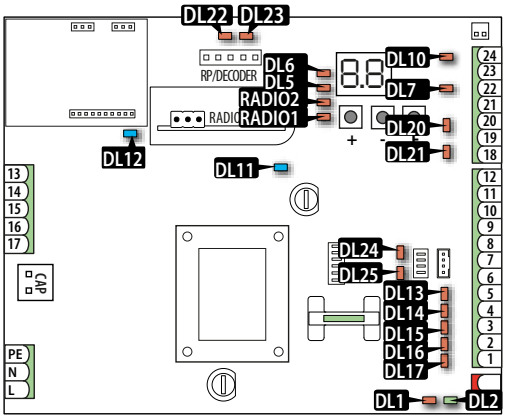

		● LED on	○ LED off	* Led flashing
DL1	Bus 2Easy operation	see § Bus 2Easy Devices, § Two-door automation		
DL2 (GREEN)	Bus 2Easy line diagnostics			
RADIO1	XF channel 1 (CH1)	in learning mode	idle ←	memorisation in progress
RADIO2	XF channel 2 (CH2)	in learning mode	idle ←	** 2 LEDs flashing alternately: Radio blocked (error 13)
DL5	Errors/alarms	errors/alarms present	no errors/alarms	-
DL6	Encoder	-	stopped ←	moving (the flashing frequency is related to the speed)
DL7	EDCL Closing sensitive edges	not engaged ←	engaged	-
DL10	EDOP Opening sensitive edges	not engaged ←	engaged	-
DL11 (BLUE)	+24V Accessories power supply +24 V⎓	on ←	off	-
DL12 (BLUE)	5V Power supply +5 V⎓	on ←	off	-
DL13 (IN5)	STOP	not active ←	command active	-
DL14 (IN4)	Closing photocells	not engaged ←	engaged	-
DL15 (IN3)	Opening photocells	not engaged ←	engaged	-
DL16 (IN2)	OPEN B (partial opening/closing)	command active	idle ←	-
DL17 (IN1)	OPEN A (total opening)	command active	idle ←	-
DL20 (IN7)	CLH (forced closing)	command active	idle ←	-
DL21 (IN6)	OPH (forced opening)	command active	idle ←	-
DL22	Radio RP channel 1 (CH1)	receiving command	idle ←	-
DL23	Radio RP channel 2 (CH2)	receiving command	idle ←	-
DL24	Opening/closing limit switch (depending on the direction of travel)	not engaged ←	engaged	-
DL25		not engaged ←	engaged	-

← = condition with the board powered, gate not engaging the limit switches, no connected devices active.

FIRMWARE VERSION

The firmware version of the board (e.g. 1.0) is shown on the display each time it is switched on, before the automation status is shown.

STATUS OF THE AUTOMATION

When the board is not in the programming menus, the display indicates the automation status with a code.

00	closed	05	opening
01	open	06	closing
02	stationary then opens	09	pre-flashing then opens
03	stationary then closes	10	pre-flashing then closes
04	paused	50	(flashing) setup required

WARNINGS FROM A PROGRAMMABLE OUTPUT

The available warnings can be enabled via programmable outputs (OUT1, OUT2) (see advanced Programming, functions o1, o2).

DISPLAYING ERROR CODES, ALARMS

When LED DL5 is lit and the display indicates the automation status (when not in the programming menus), it is possible to check the active ERRORS and/or ALARMS:

- press and hold **+** and **-** simultaneously

The display shows the active errors/alarms, single (e.g. Er 07) or multiple (e.g. Er 07 Er 16 AL 51).

Refer to table Errors, Alarms.

6 Errors, Alarms

Error (number on white background) - **Alarm** (number on grey background).

00	No notification	
5L	Radio mode present SLH, SLH LR, LC, RC, DS	
Fd	Radio mode present FDS	
07	Motor 1 fault	Motor disconnected or short-circuited. Check the wiring. If the problem persists, replace the motor.
09	Mains power supply fault	Power supply input voltage synchronism problem. Check the mains power supply.
13	Radio blocked	The current radio codes are not compatible with the installed radio module. Clear the radio controls, or change the radio module type. The module has been removed or is damaged.
14	Local radio control disabled	The radio controls can only be managed via Simply Connect.
15	SETUP inhibited	Make sure that the STOP contact is not open.
16	Encoder failure	Make sure that the encoder is connected properly. If the problem persists, replace the encoder.
20	Failsafe test failed	Device Failsafe test failed. Check the connections, programming, and that the safety devices are working correctly.
22	Programming data corrupted	Programming data NOT valid or corrupted. If the error persists, restore the default programming and program again.
24	Consecutive obstacles in closing	The number of consecutive obstacles in closing has been reached. Remove the obstacle. If the problem persists, repeat the setup. If the board uses AUTOMATIC logic, the automation remains open and an OPEN command is required to close it.
31	Consecutive obstacles in opening	The number of consecutive obstacles in opening has been reached. Remove the obstacle. If the problem persists, repeat the setup.
32	Motion timeout	The movement is in timeout. Check the manual release or damage to the rack and pinion gear. Make sure that the limit switches activate correctly. If the problem persists, replace the board or motor.

34	Consecutive obstacles - UL standard	2 consecutive obstacles in opening/ closing were detected. Remove the obstacle and press the STOP command.
35	Bus 2Easy device fault/conflict	Check the addresses of the devices.
36	Bus 2Easy short circuit / overload	Check the connections of the Bus 2Easy devices that are connected and registered. In the case of a two-leaf automation, make sure that the Secondary board has been configured.
39	Setup incorrect or missing	Perform the setup.
42	Partial open	Automation is in partial open mode.
51	Obstacle detected when closing	Make sure that the NC sensitive edge terminals are connected or bridged. Make sure that the sensitive edges are programmed correctly. The notification disappears on the next movement.
52	Obstacle detected when opening	Make sure that the NC sensitive edge terminals are connected or bridged. Make sure that the sensitive edges are programmed correctly. The notification disappears on the next movement.
53	Number of cycles corrupted	Carry out the scheduled maintenance of the system.
60	Maintenance request	Carry out scheduled maintenance.
65	Setup in progress	The setup is in progress. The notification remains as long as the phase is in progress.
76	Radio code memory full	The radio memory is full. **Simply Connect** allows you to delete any unused radio codes. Use and additional MiniDec/DECODER/RP module if necessary.
87	Bus 2Easy registration in progress	The registration procedure is in progress.
89	Sensitive edge read error	Sensitive edges Failsafe test failed. Check the connections, programming, and make sure that the devices are working correctly.
90	Programming in progress	The registration procedure is in progress via **Simply Connect**.
99	Control board data deletion	All the data on E781 has been deleted.

11. MAINTENANCE

11.1 SCHEDULED MAINTENANCE

It is mandatory to carry out the operations indicated in table ▦ Maintenance of 746 C - 844 C, in order to keep the operator working reliably and safely.

The installer/machine manufacturer is responsible for drawing up the maintenance plan for the machine, supplementing this list or shortening maintenance intervals according to the machine characteristics and current local regulations.

▦ **7** Scheduled maintenance

Maintenance 746 C - 844 C	Frequency in months
Check that the cover/casing and all the movable guards are integral and that they are fastened correctly. Tighten screws and bolts where necessary.	12
Check that the body of the operator is undamaged.	12
Check the fastening torque of the brackets and screws that secure the gearmotor to the foundation plate.	12
Check the wear of the pinion (replace if necessary).	12
Check that the pinion and rack engage correctly and that the distance between them is correct.	12
Check that it is irreversible.	12
Make sure that there is no oil leaking from the seals.	12
Check that the limit switches are intact and their correct operation and adjustment.	12
Check that the lights on the cover are intact and that they are working correctly.	12
Check that the cable gland in the cable compartment is intact and that it works correctly.	12
Make sure that the manual release is working correctly.	12
Check that the hand-hazard warning sticker is present and intact.	12
Generally clean the gearmotor with a clean cloth, moistened with a neutral detergent.	12
Check that the connectors and wiring are intact. Check that there are no signs of overheating, burning etc. of electronic components.	12
Check that the earth connections are intact and that the circuit breaker and differential switch are working correctly.	12
Check that the encoder is working properly.	6

Maintenance of other components	Frequency in months
STRUCTURES	
Check the plinth, the structures and components of the building/fence adjacent to the automation, ensuring there is no damage, cracking or subsidence.	See manufacturer's instructions
Check the gate's area of movement, ensuring it is free from obstacles, objects or deposits which would reduce the effectiveness of the safety measures.	See manufacturer's instructions
Check that there are no gaps in the perimeter fence and that any protective grilles in the area where it overlaps with the mobile leaf are intact.	See manufacturer's instructions
Ensure that there are no sharp protrusions which could represent a perforation or hooking hazard.	See manufacturer's instructions
Check the leaf containing guide and the anti-tipping column, ensuring they are correctly fastened and intact.	See manufacturer's instructions
Perform a general clean of the area of movement of the gate.	See manufacturer's instructions
Check that the sliding guides are straight and not excessively worn.	See manufacturer's instructions
Check that the mechanical stops are fastened solidly and in good condition. This check must be performed on both sides, simulating any knocks which could occur during use.	See manufacturer's instructions

GATE	
Check the frame: make sure that it is fixed correctly, that it is intact and that there is no deformation or damage. Tighten screws and bolts where necessary.	See manufacturer's instructions
Check the leaf: make sure that it is intact and that there is no deformation or damage.	See manufacturer's instructions
Check that the pedestrian door integrated in the sliding leaf is intact (if present).	See manufacturer's instructions
Check that the bearings are in good condition and there is no friction. Check the wheels, ensuring that they are intact, correctly fastened and free of deformation, wear and rust.	See manufacturer's instructions
Check the rack, ensure it is straight, not worn, that it is the correct distance from the pinion along its entire length and correctly fastened to the gate.	12
Cantilever gate, check the solidity of the guide system for the suspended leaf and the counterweight, if present.	See manufacturer's instructions
Perform a general clean of the area of movement of the gate.	12
Make sure that the pictograms are present and intact. If they are missing or damaged, replace them.	12
PROTECTIVE DEVICES AND CONTROL DEVICES	
Check that the protective devices are intact and that they operate correctly.	See manufacturer's instructions
Check that the control devices are intact and that they operate correctly.	See manufacturer's instructions
Check that each pair of photocells is working correctly and that there is no optical/light interference between the pairs of photocells.	6
Check that indicator lights are intact that they are working correctly, if present.	See manufacturer's instructions
GATE COMPLETE WITH GEARMOTOR	
Check that the gate operates properly in both directions with all the devices installed.	6
Check that the gate moves correctly - smooth, regular and without making abnormal l noises.	6
Check that both the opening and closing speed are correct and that the expected stop positions and slowdowns are correct.	6
Check that the safety devices (e.g. sensitive edges) are working correctly, if present.	6
Repeat the operations in the "Final checks" section.	6
Check that the gate's CE marking and the DANGER, AUTOMATIC MOVEMENT warning sign is present, intact and legible.	12

11.2 RESTORE FACTORY SETTINGS

The procedure:

- restores all the default programming settings of the board
- deletes the setup
- deletes all the radio controls
- resets the cycle counter

1. Start with the board not powered, then switch on the mains power: the display lights up.
2. 2 alternating dots appear on the display for 10 s, then the FW version is shown (e.g. 1.0). While the display is showing the FW version, press and hold down the **+**, **-**, **F** buttons for approximately 5 s.

The board restarts. Release the buttons when the alternating dots appear on the display.

At the end of the procedure, SO flashes on the display: the setup procedure has to be carried out.

11.3 PROGRAMMING THE SCHEDULE MAINTENANCE REQUEST

It is possible to program the number of cycles after which the maintenance request is displayed: when the automation reaches the set number of cycles, there is a pre-flashing of at least 8 s at each movement.

The user should ask the installer to carry out scheduled maintenance.

1. In advanced programming, function AS, select Y to enable the maintenance request.
2. In function nb set the value in hundreds using the **+** and **-** buttons.
3. In function nc set the value in thousands using the **+** and **-** buttons.
4. In function nd set the value in tens using the **+** and **-** buttons.
5. Exit and save the programming.

11.4 CYCLE COUNTER

READING THE CYCLES PERFORMED COUNTER

Add together the readings of functions nb (hundreds of thousands), nc (thousands) and nd (tens) in advanced programming.

RESETTING THE CYCLE COUNTER

In advanced programming, with function AS = no, go to function nd and press **+** and **-** for 5 s.

12. UPDATING THE BOARD FIRMWARE

The XUSB module (supplied separately) and a suitable USB memory device (not supplied) can be used to load the firmware (FW) to the board. The E781 FW is supplied by FAAC in a compressed file. The file name is E781_xx.hex, where xx is the FW version.

USB device requirements Maximum power consumption 500 mA. Formatted with the FAT or FAT 32 file system.

1. Extract the FW file and save it in the root of the USB device, without changing the original filename.
2. Insert the USB device into the XUSB module.
3. With the power supply switched off, insert the XUSB onto the E781 (**CONNECTIVITY** connectors).

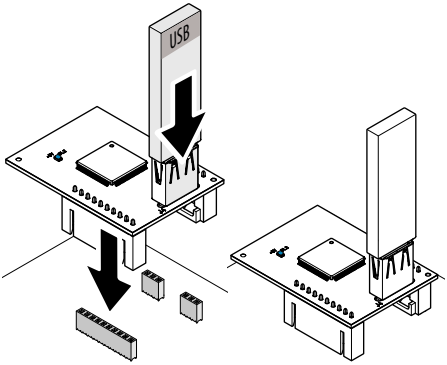

4. Carry out the UPGRADE or DOWNGRADE procedure.

12.1 UPGRADE - LOAD THE NEW FW

This procedure is available when there is a more recent FW version on the USB device compared to the one on the board.

1. After having inserted the XUSB and the USB memory device, turn on the board.
   - The board display shows 2 alternating dots and then the FW update starts automatically.
   - The board display shows the percentage progress (00-99) and lastly shows 2 alternating dashes.
2. Switch off the power supply, remove the XUSB. Then switch the board back on and check the FW version.

12.2 DOWNGRADE - LOAD A PREVIOUS FW VERSION

This procedure is available when there is the same or an older version of the FW on the USB device compared to the one on the board.

1. After having inserted the XUSB and the USB memory device, turn on the board.
   - The board display shows no.
2. Press **+** or **−** to display Y, then press and release **F**.
   - The board display shows the percentage progress (00-99) and lastly shows 2 alternating dashes.
3. Switch off the power supply, remove the XUSB. Then switch the board back on and check the FW version.

■ If you do NOT wish to downgrade the FW

- Press **F** at step 2 when the board display shows no.
- The board display shows 2 alternating dashes.
- Switch off the power supply, remove the XUSB and then switch the board back on.

■ Errors

If there is an error, the LED DL1 on XUSB flashes quickly. Switch the power off and on again; then repeat the procedure from the beginning.

13. INSTRUCTIONS FOR USE

It is the responsibility of the installer to provide the operator of the automation with the instructions for use, maintenance and disposal, appropriately integrating the information provided below.

COMMANDS

■ **COMPLETE OPENING (OPEN)**

Command available in all operating logics.

■ **PARTIAL OPENING (OPEN B)**

Command available in the automatic operating logics.

■ **CLOSE (OPEN B)**

Command available in operating logics C, b and bC.

■ **STOP**

Command available in all operating logics. It has priority over the other commands. It stops the automation and prevents it from being operated until the button is released.

■ **FORCED OPENING, FORCED CLOSING**

Command available in all operating logics. The type of command has to be activated twice within 2.5 s. The gate moves as long as the second activation is maintained. During forced command movements, the photocells and safety devices have no effect.

⚠ For safety reasons, the device must be activated intentionally and the gate must be visible.

DETECTION DEVICES

■ **Closing photocells**

The command issued when the photocells are triggered during closing depends on the programming:

- open immediately
- stop immediately and open when the photocells are released
- if they are engaged when the leaves are stationary, the closing photocells prevent closing

■ **Opening photocells**

The command issued when the photocells are triggered during opening depends on the programming:

- close immediately
- stop immediately and open when the photocells are released

■ **Opening/closing photocells**

The triggering of the photocells stops the gate and the movement continues when they are released.

■ **Sensitive edge safety**

If an obstacle is detected during opening or closing, the automation reverses partially or totally (programming) and then stops.

■ **Anti-crushing due to obstacle**

If an obstacle is detected during opening or closing, the automation reverses (ANTI-CRUSHING) and then stops.

ⓘ At the 4th consecutive obstacle when CLOSING, if the board uses AUTOMATIC logic, the automation remains open and an OPEN command is required to close it.

ACCESSORIES

■ **Indicator light**

Lights up during opening and stays on as long as the automation remains open. Flashes during closing. It is off when the automation is closed.

■ **Courtesy light**

Lights up during movements and remains on for the set time.

■ **Traffic light control**

Lights up during opening and remains on as long as the automation remains open.

OPERATING LOGICS

ⓘ the STOP command has priority in all the logics and stops the automation.
The CLOSE command always closes the automation.

■ E **SEMI-AUTOMATIC**

This logic only uses the OPEN command.

OPEN if the automation is closed, causes it to open.

OPEN if the automation is open, causes it to close.

OPEN during opening, stops the gate and the next OPEN command closes it.

OPEN during closing, causes it to reopen.

The triggering of the photocells during movement, reverses the gate.

■ EP **SEMI-AUTOMATIC STEP-BY-STEP**

This logic only uses the OPEN command.

OPEN if the automation is closed, causes it to open.

OPEN if the automation is open, causes it to close.

OPEN during opening or closing, stops the gate and the next OPEN command reverses the direction.

The triggering of the photocells during movement, reverses the gate.

■ C **DEAD-MAN**

This logic uses dead man commands OPEN A (OPEN) and OPEN B (CLOSE). Partial motion is not available.

⚠ A maintained command must be activated intentionally and the automation must be visible.

Maintained OPEN opens the automation.

Maintained CLOSE (OPEN B) closes the automation.

If the photocells are triggered, movement is stopped.

■ b **SEMI-AUTOMATIC b**

This logic uses the commands OPEN and OPEN B (CLOSE). Partial motion is not available.

OPEN if the automation is closed, causes it to open.

OPEN during closing, causes it to reopen.

CLOSE (OPEN B) if the automation is open, it cause it to close, during opening, has no effect.

If the photocells are triggered the direction of movement is reversed.

■ bC **MIXED (b during opening, C during closing)**

This logic uses impulse commands OPEN A (OPEN) and dead-man command OPEN B (CLOSE). Partial motion is not available.

⚠ A maintained command must be activated intentionally and the automation must be visible.

OPEN opens the automation.

Maintained CLOSE (OPEN B) closes the automation. During opening, a non-maintained CLOSE command stops the automation.

OPEN during closing, causes it to reopen.

The triggering of the closing photocells reverses the direction of movement; during opening, it stops the movement.

■ Ar **AUTOMATIC WITH EARLY CLOSING**

This logic only uses the OPEN command.

OPEN if the automation is closed, causes it to open. The automation closes automatically after the pause time has elapsed.

OPEN during the pause, resets the pause time.

OPEN during opening, is ignored.

OPEN during closing, causes it to reopen.

The triggering of the closing photocells during opening stops the automation, when released the automation closes.

■ A **AUTOMATIC**

This logic only uses the OPEN command.

OPEN if the automation is closed, causes it to open. The automation closes automatically after the pause time has elapsed.

OPEN during the pause, resets the pause time.

OPEN during opening, is ignored.

OPEN during closing, causes it to reopen.

The triggering of the closing photocells during pause, reloads the pause time.

■ AP **AUTOMATIC STEP-BY-STEP**

This logic only uses the OPEN command.

OPEN if the automation is closed, causes it to open. The automation closes automatically after the pause time has elapsed.

OPEN during the pause, stops the gate and the next OPEN command closes it.

OPEN during opening, stops the gate and the next OPEN command closes it.

OPEN during closing, causes it to reopen.

The triggering of the closing photocells during pause, reloads the pause time.

■ S **AUTOMATIC SAFETY**

This logic only uses the OPEN command.

OPEN if the automation is closed, causes it to open. The automation closes automatically after the pause time has elapsed.

OPEN during pause, causes it to close.

OPEN during opening, causes it to close.

OPEN during closing, causes it to reopen.

The triggering of the closing photocells when paused, closes the gate - during opening, requests closing - during closing, causes the gate to reverse and then closes it immediately.

■ AI
AUTOMATIC 1

This logic only uses the OPEN command.

OPEN if the automation is closed, causes it to open. The automation closes automatically after the pause time has elapsed.

OPEN during the pause, resets the pause time.

OPEN during opening, is ignored.

OPEN during closing, causes it to reopen.

The triggering of the closing photocells when paused, closes the gate - during opening, requests closing - during closing, causes the gate to reverse and then closes it immediately.

■ SP **AUTOMATIC STEP-BY-STEP SAFETY**

This logic only uses the OPEN command.

OPEN if the automation is closed, causes it to open. The automation closes automatically after the pause time has elapsed.

OPEN during pause, causes it to close.

OPEN during opening or closing, stops it and the next OPEN command reverses the direction.

The triggering of the closing photocells: during pause, closes the gate - during opening, requests closing - during closing, causes the gate to open and then closes it immediately.

13.1 EMERGENCY USE

In emergencies or if there is a fault, turn off the power supply to the automation. If the leaf can be moved safely by hand, use the MANUAL OPERATION mode; otherwise place the automation out of service until it has been reset/repaired.

In the case of a breakdown, the automation must be reset/repaired exclusively by the installer/maintenance technician.

13.2 MANUAL OPERATION

In order to operate the leaf manually, the gearmotor has to be released using the lever with key.

RELEASING THE GEARMOTOR

1. Open the lock cover.
2. Insert the key and turn it clockwise by 90°.
3. Open the release lever by 90°.

During manual operation, gently guide the leaf the whole way. Do not push it and let it slide freely.
Do not leave the gearmotor in the released mode: restore automatic operation after moving it manually.

RESTORING OPERATION

Make sure that the gate is closed with the relative limit switch engaged before turning the power back on and operating the automation.

4. Close the release lever.
5. Turn the key so that it is vertical and remove it.
6. Close the lock cover.

Move the leaf manually to make sure that the mechanical system meshes correctly.

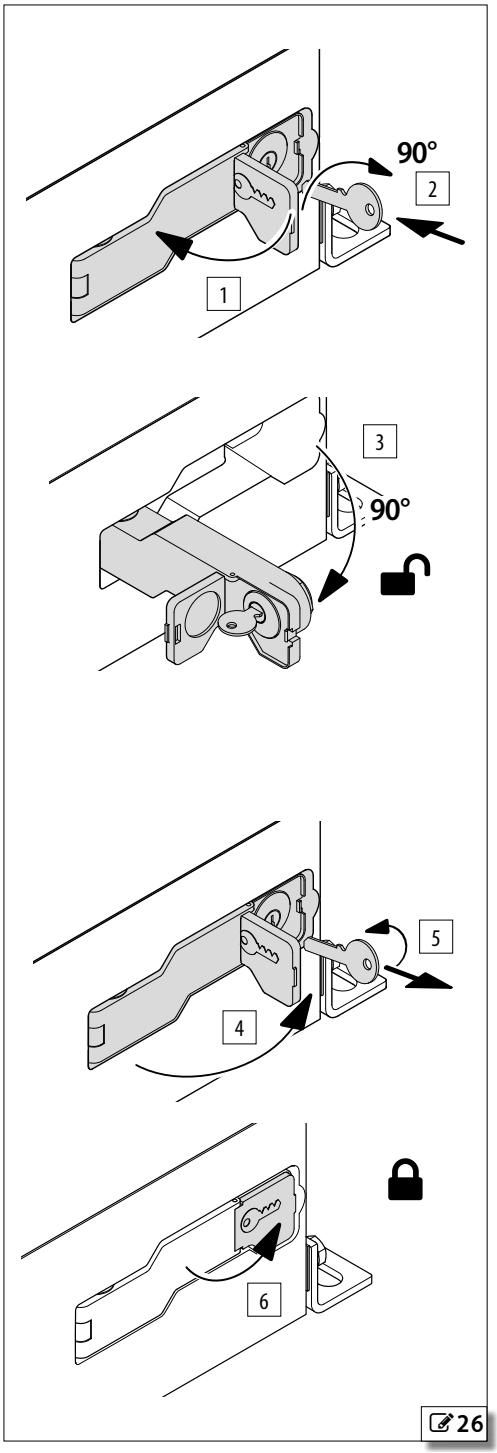

1 Foundation for leaves of maximum weight and width

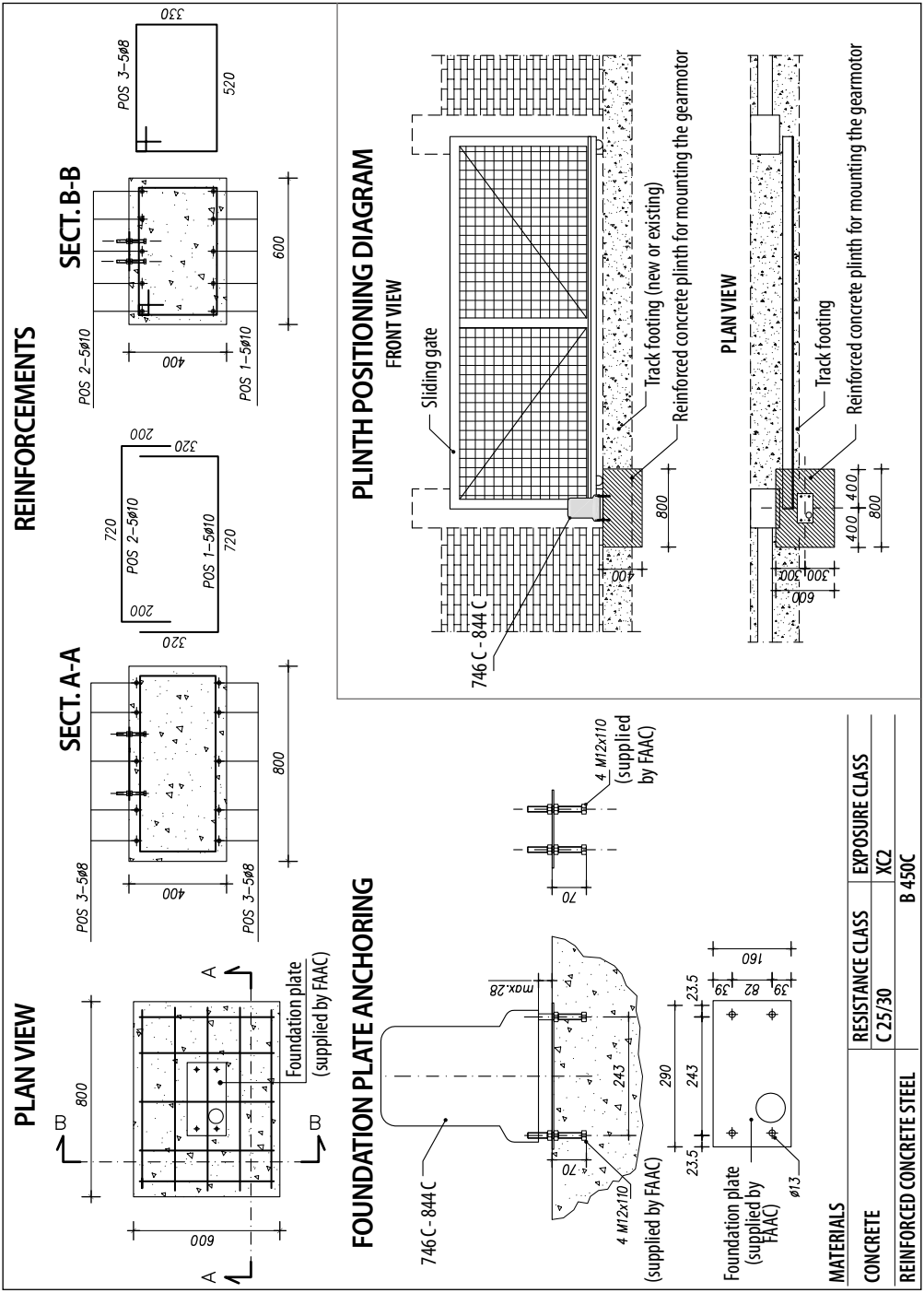

ENGLISH

Translation of the original instructions

A BRAND OF
FAAC TECHNOLOGIES

FAAC S.p.A. Soc. Unipersonale
Via Calari, 10 - 40069 Zola Predosa BOLOGNA - ITALY
Tel. +39 051 61724 - Fax +39 051 09 57 820
www.faac.it - www.faactechnologies.com

532150 - Rev.A